1 TOOLS AND MATERIALS

- Rule
- Pencil
- Spirit level
- Sealer
- Square
- Cutter
- Belts
- Woodworking tools and materials
- Rags
- Wooden spacers

2 Personal protective equipment (ppe)

- Safety goggles

3 BEFORE STARTING

N.B.:
The tub must be installed by at least two people.

CAUTION:
Damage risk. Do not lift the tub using its edge.

- Observe all local hydraulic and construction regulations.
- The following instructions are for qualified personnel with sufficient technical know-how and experience to handle the product in total safety.
- This is a bathtub and must only be used for this purpose. Improper use of the tub shall relieve the producer from all liability and invalidate the warranty.
- Unpack the tub and inspect it for damage. Put the tub back in its pack until it is required for installation.
- Before installing the tub, check access to the final hydraulic connections.
- Check the type of connection and assembly for the tap.
- Do not install the tap over the overflow.

4 PREPARING THE SITE

- Make sure the floor and the platform (if mounted) offer a support of at least 800 kg (approximately 1800 lb) under the tub. **Make sure the floor and supporting surface are flat and even.**
- This tub can be installed on the floor or on a raised or recessed platform.
- Caution: This tub model has limited space under the drain hole. Provide a drain well, suitably positioned, taking into account the tub's overall dimensions (figure 2).

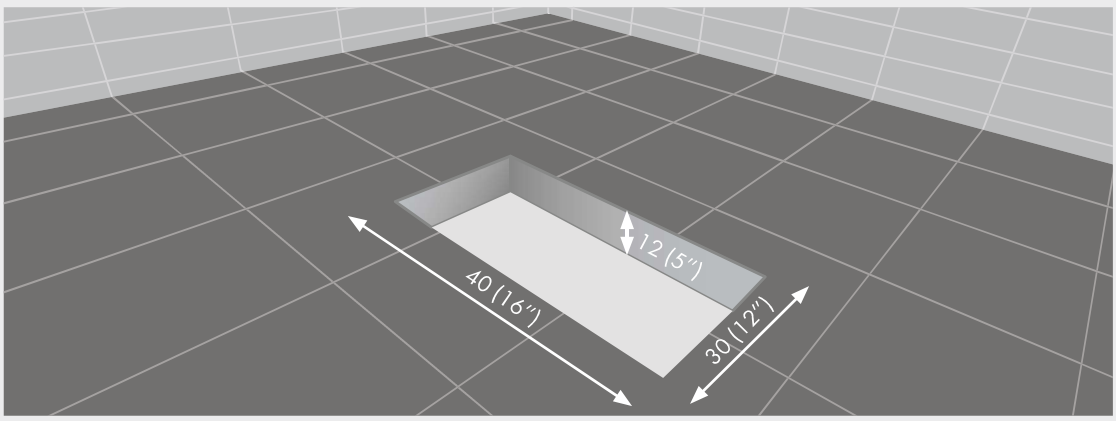

Dimensions in centimetres and inches

Fig. 2

5 PREPARING THE TUB

- Remove the tub from its pack and dispose of the latter according to local by-laws.
- Place the tub in its installation position and keep it clear from the floor using wooden blocks.
- Install the drain kit on the tub as shown in Fig. 3, following the instructions of the manufacturer of the drain kit.

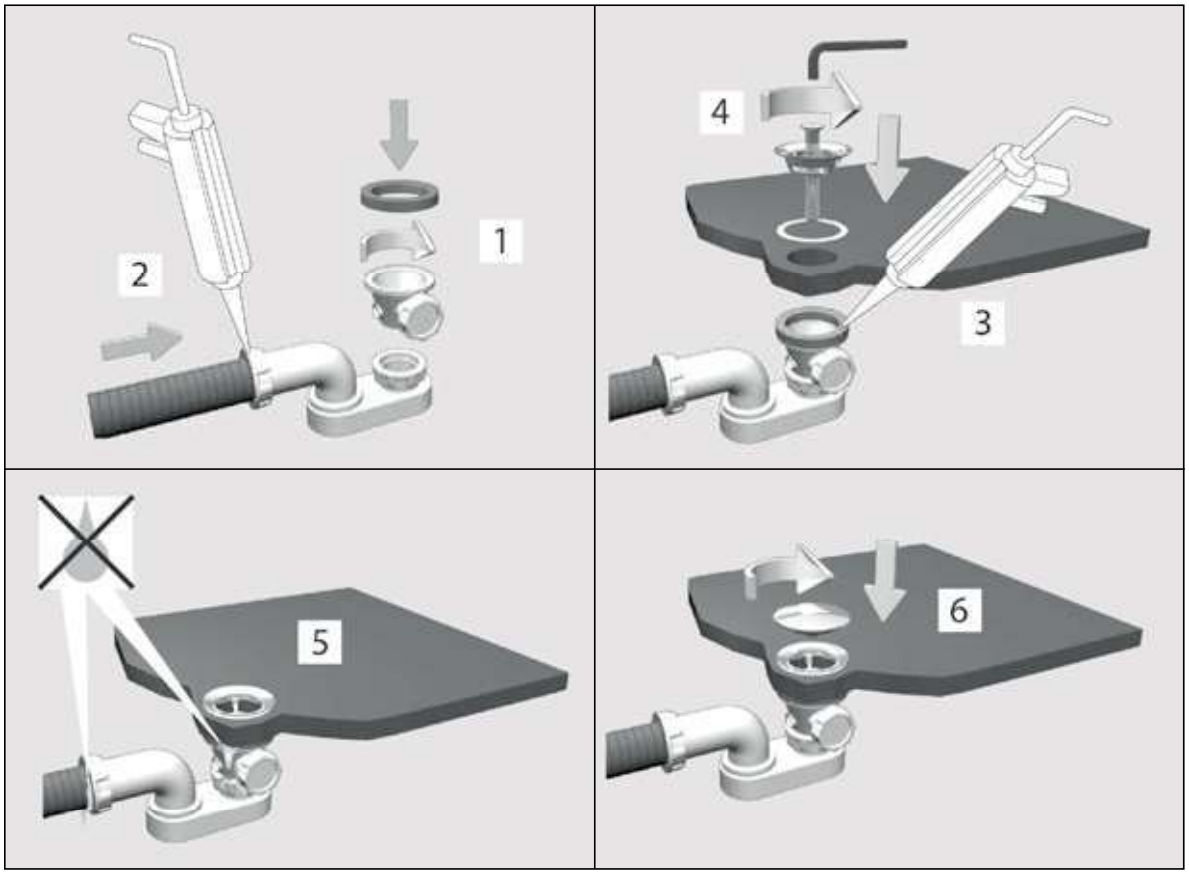

Fig.3

6 INSTALLING THE PIPING

CAUTION:
Risk of injury.
Taps mounted on the edge of the tub that can inadvertently be used as a means of support are not appropriate or safe for this operation.

CAUTION:
Risk of damage.
Make sure gaskets are applied to all the drain connections.

- Connect the trap to the plug surround as per the drain kit manufacturer's instructions.
- Open the hot and cold water taps and check all the connections for leaks.
- Fill the tub with water and check the drain connections for leaks.
- Fill the tub to the overflow and check for leaks.
- Remove the wooden blocks and apply silicone around the base of the tub.

7 WARNINGS

- This tub must not be used by people with impaired physical, sensory and/or cognitive capacities (including children) or those not possessing the notions required to use it. Make sure that children are monitored by a person responsible for their safety.
- The tubs have been designed for domestic or similar use and must only be installed and used indoors at room temperature.
- It is dangerous to use them in the vicinities of electrical appliances (radios, hairdryers, ...).
- Take special care when using the tub on your own: remaining in the water for a long time could cause nausea, dizziness and fainting.
- do not use the tub after taking medicines or other substances that could cause drowsiness or alter your blood pressure.
- Never use water at temperatures higher than 40 °C.
- When the surface of the tub is wet it becomes more slippery, especially if shampoos, soaps and oils are used. Pay due care and attention!
- DO NOT use aggressive product to clean the tub such as acetone, trichloroethylene, strong acids (hydrochloric acid ...) and strong bases (caustic soda ...), industrial detergents, solvents used in the paint industry. For further information consult the attached product care and maintenance instructions.
- DO NOT use metal scrapers, iron brushes, or other domestic metal tools to remove stains, paint, filler and the like.
- If certain substances, such as ink, cosmetics and dyes, remain in prolonged contact with the surface of the tub, they can stain the material; the same thing applies to lit cigarettes.

8 LIMITED WARRANTY

This warranty covers any production, material or processing faults.
The producer shall, at its discretion, repair, replace or perform other appropriate operations if the inspection reveals any faults occurring in normal conditions of use within 2 years from the date of purchase (Europe) or within 1 year from the date of purchase (U.S.A., Canada and the rest of the world). The producer declines liability for removal or installation costs.
The duration of implied warranties, including saleability and suitability for particular purposes, is expressly limited to the duration of this warranty.
The producer declines all liability for special, incidental or consequential damage.
As some states/ provinces do not limit the duration of an implied warranty or special, incidental or consequential damage, these limits and exclusions may not apply. This warranty gives you specific legal rights. This warranty does not affect the purchaser's binding legal rights.
This is our exclusive written warranty.

Do not use this product with a water temperature in excess of 55°C (130°F).
The producer declines all liability for damage deriving from the incorrect use of the product.

8.1 Exceptions and restrictions

When the product is not used according to the operating instructions contained in the installation instructions and when the tips and warnings are not observed. When the product has been modified or partially or totally dismounted, or if it has been used negligently and suffered damage at the hands of the user, other individuals or tools used without the authorisation by producer. This warranty does not cover damage caused by disasters, such as fire or natural calamities, including flooding, earthquakes, etc.