alice

Selma

Articolo / Article — COD.

Vasca da bagno in solid surface cristalplant® 170x76xh52
Solid surface cristalplant® bathtub 170x76xh52 — VASE17076OP



Colorata esternamente/External painting Alice color
Specificare il colore al momento dell'ordine
Specify the color when ordering — VASE17076OP09..

Full color/full color
Specificare il colore al momento dell'ordine
Specify the color when ordering — VASE17076OP..

Opachi / Matt

08	09	19	37	39	43	44	45	46	47
Nero	Bianco	Grigio	Rosa	Verde Alpi	Caffè	Sabbia	Laguna	Zenzero	Malva

cm 170x76x h 52	kg 81	Capienza bacino/Basin capacity	lt 307	pallet ita	pallet ex

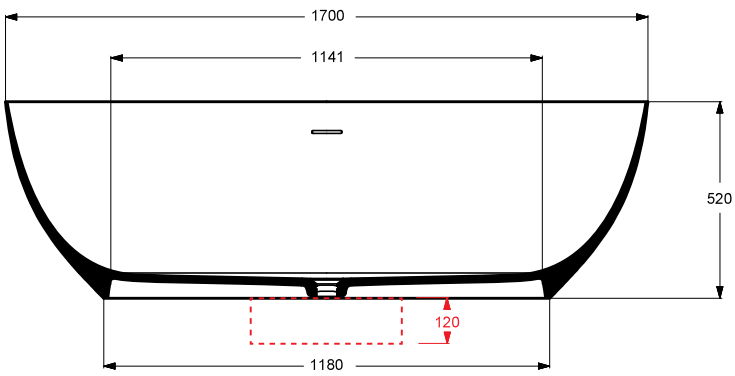

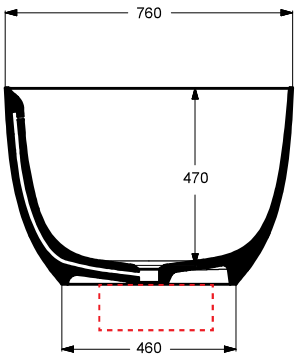

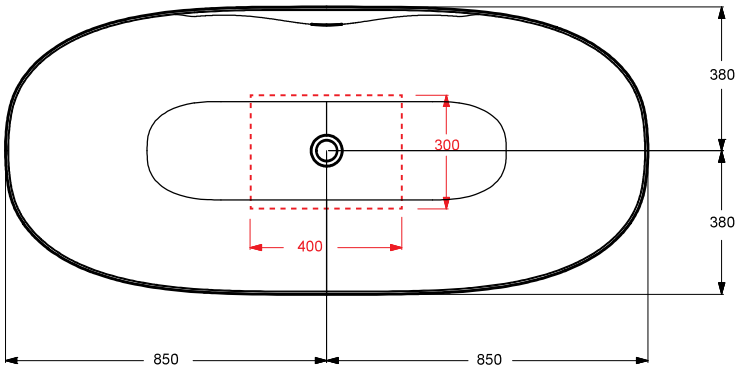

TECNICAL SHEET n°:	DESIGNER: ALICE		CODE: VASE17076OP	
SHEET FORMAT: A4	ISO	REVISION: 00	SCALE: 1:20	DATE: 29/11/2025
REGULATION:				Pg: 1/7
All the measurements respect the tollerances provided by the Alice Ceramica srl.				

Alice Ceramica srl
Via Sassacci, 17 - 01033
Civita Castellana (VT), Italy
Tel [+39] 0761.598.328 [+39] 0761.513.252
Fax [+39]0761.540.352
www.aliceceramica.com - info@aliceceramica.it

* Regulations here shown are exclusively referred to ceramic items

alice

Selma

Articolo / Article — COD.

Vasca da bagno in solid surface cristalplant® 180x80xh52
Solid surface cristalplant® bathtub 180x80xh52 — VASE18080OP



Colorata esternamente/External painting Alice color
Specificare il colore al momento dell'ordine
Specify the color when ordering — VASE18080OP09..

Full color/full color
Specificare il colore al momento dell'ordine
Specify the color when ordering — VASE18080OP..

Opachi / Matt

08	09	19	37	39	43	44	45	46	47
Nero	Bianco	Grigio	Rosa	Verde Alpi	Caffè	Sabbia	Laguna	Zenzero	Malva

cm 180x80x h 52	kg 83,5	Capienza bacino/Basin capacity	lt 320	pallet ita	pallet ex

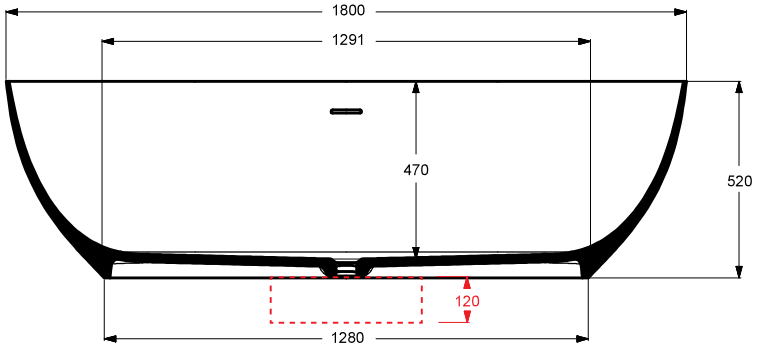

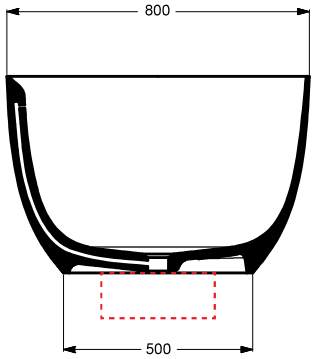

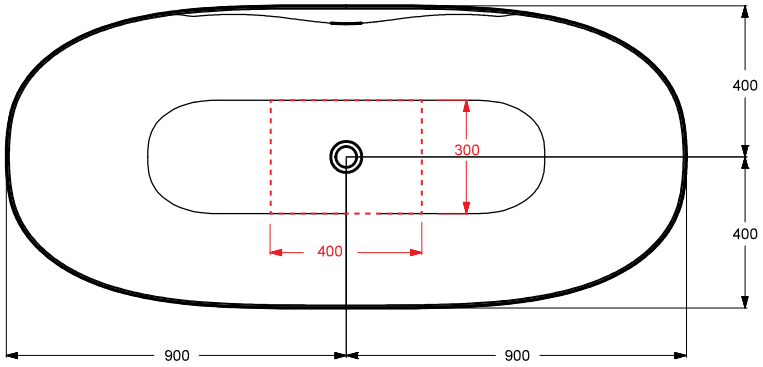

TECNICAL SHEET n°:	DESIGNER: ALICE		CODE: VASE18080OP	
SHEET FORMAT: A4	ISO	REVISION: 00	SCALE: 1:20	DATE: 29/11/2025
REGULATION:				Pg: 1/7
All the measurements respect the tollerances provided by the Alice Ceramica srl.				

Alice Ceramica srl
Via Sassacci, 17 - 01033
Civita Castellana (VT), Italy
Tel [+39] 0761.598.328 [+39] 0761.513.252
Fax [+39]0761.540.352
www.aliceceramica.com - info@aliceceramica.it

* Regulations here shown are exclusively referred to ceramic items

Selma

Accessori / Accesories

COD.



Piletta di scarico up&down 1"1/2 con cover in tinta
up&down 1" 1/2 drain cover with matching finish

PIL013

TECNICAL SHEET n°:	DESIGNER: ALICE		CODE: VASE17076OP	Alice Ceramica srl Via Sassacci, 17 - 01033 Civita Castellana (VT), Italy Tel [+39] 0761.598.328 [+39] 0761.513.252 Fax [+39]0761.540.352 www.aliceceramica.com - info@aliceceramica.it
SHEET FORMAT: A4	ISO	REVISION: 00	SCALE: 1:20	DATE: 29/11/2025
REGULATION:				Pg: 2/2
All the measurements respect the tollerances provided by the Alice Ceramica srl.				

* Regulations here shown are exclusively referred to ceramic items