alice

Mirena

Articolo / Article — COD.

Vasca da bagno in solid surface cristalplant® 169X82Xh61
Solid surface cristalplant® bathtub 169X82Xh61 — VAMIOP



Colorata esternamente/External painting Alice color
Specificare il colore al momento dell'ordine
Specify the color when ordering — VAMIOP09..

Full color/full color
Specificare il colore al momento dell'ordine
Specify the color when ordering — VAMIOP..

Opachi / Matt

08	09	19	37	39	43	44	45	46	47
Nero	Bianco	Grigio	Rosa	Verde Alpi	Caffè	Sabbia	Laguna	Zenzero	Malva

cm 169X82Xh61	kg 104	Capienza bacino/Basin capacity	lt 354	pallet ita	pallet ex

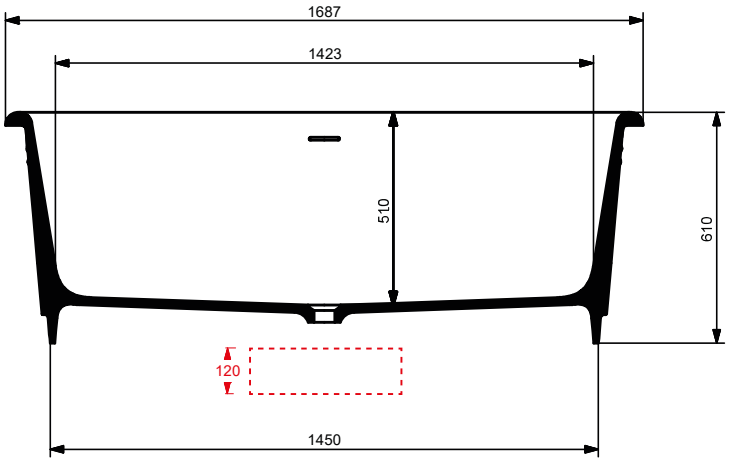

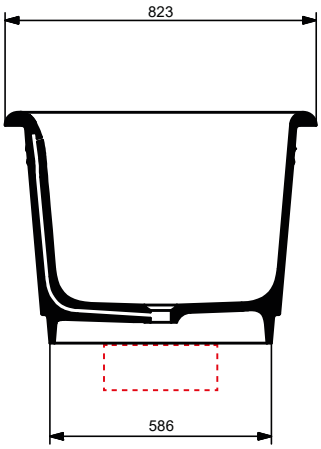

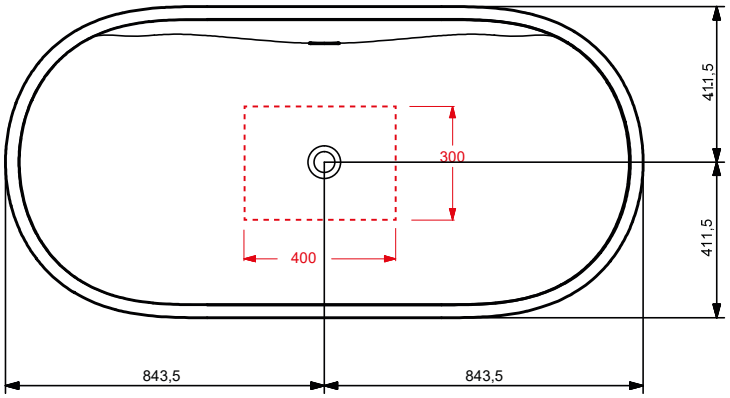

TECNICAL SHEET n°:	DESIGNER: ALICE		CODE: VAMIOP	
SHEET FORMAT: A4	ISO	REVISION: 00	SCALE: 1:20	DATE: 07/01/2026
REGULATION:				Pg: 1/8
All the measurements respect the tollerances provided by the Alice Ceramica srl.				

Alice Ceramica srl
Via Sassacci, 17 - 01033
Civita Castellana (VT), Italy
Tel [+39] 0761.598.328 [+39] 0761.513.252
Fax [+39]0761.540.352
www.aliceceramica.com - info@aliceceramica.it

* Regulations here shown are exclusively referred to ceramic items

Accessori / Accesories

COD.



Piletta di scarico up&down 1"1/2 con cover in tinta
up&down 1" 1/2 drain cover with matching finish

PIL013

TECNICAL SHEET n°:	DESIGNER: ALICE		CODE: VAMIOP	
SHEET FORMAT: A4	ISO	REVISION: 00	SCALE: 1:20	DATE: 07/01/2026
REGULATION:				Pg: 2/8
All the measurements respect the tollerances provided by the Alice Ceramica srl.				

Alice Ceramica srl
Via Sassacci, 17 - 01033
Civita Castellana (VT), Italy
Tel [+39] 0761.598.328 [+39] 0761.513.252
Fax [+39]0761.540.352
www.aliceceramica.com - info@aliceceramica.it

* Regulations here shown are exclusively referred to ceramic items