Lunaris

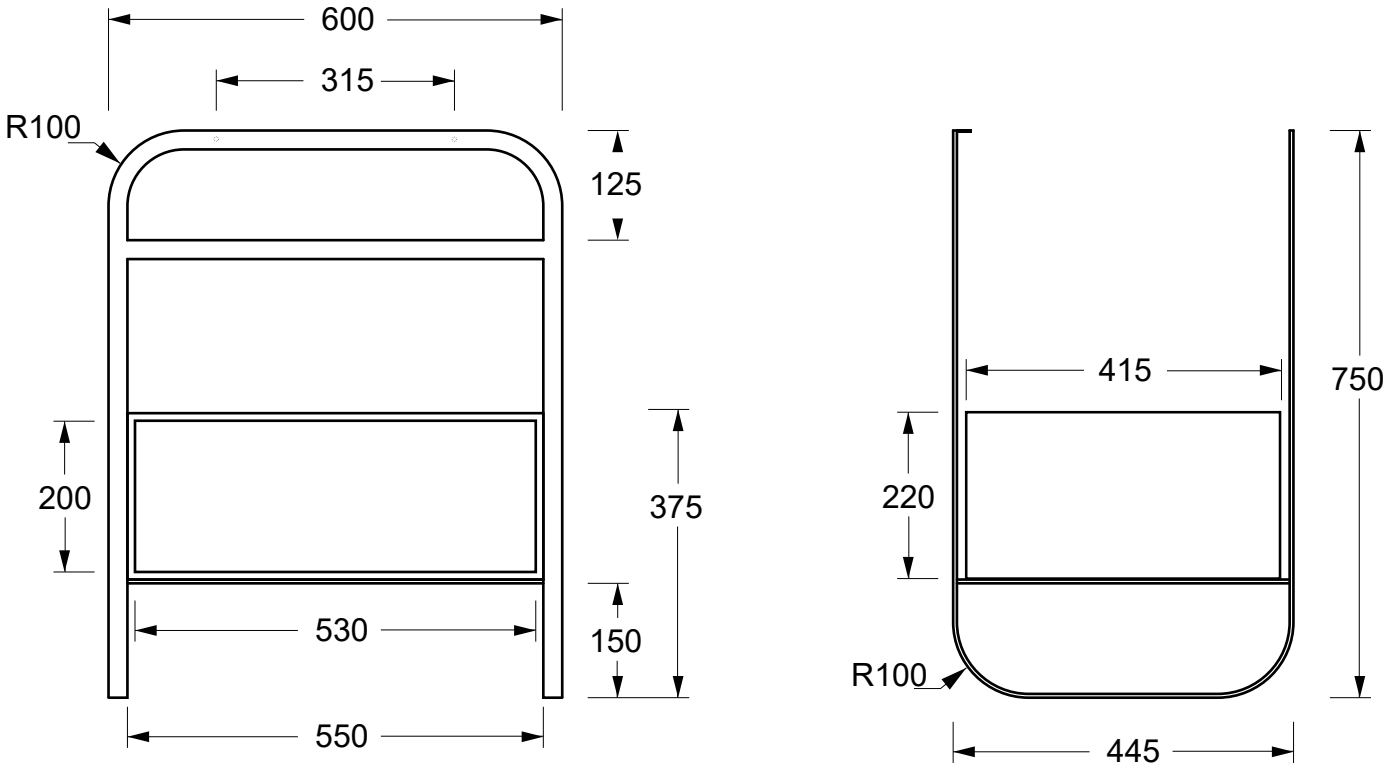

TECNICAL SHEET n°: 00	DESIGNER: MANUEL DI GIACOBBE			CODE:
SHEET FORMAT: A4	ISO	REVISION: 00	SCALE: 1:10	DATE: 06/07/2023
REGULATION:				Pg: 1/1
All the measurements respect the tollerances provided by the Alice Ceramica srl.				

Alice Ceramica srl
Via Sassacci, 17 - 01033
Civita Castellana (VT), Italy
Tel [+39] 0761.598.328 [+39] 0761.513.252
Fax [+39]0761.540.352
www.aliceceramica.com - info@aliceceramica.it

* Regulations here shown are exclusively referred to ceramic items

Lunaris

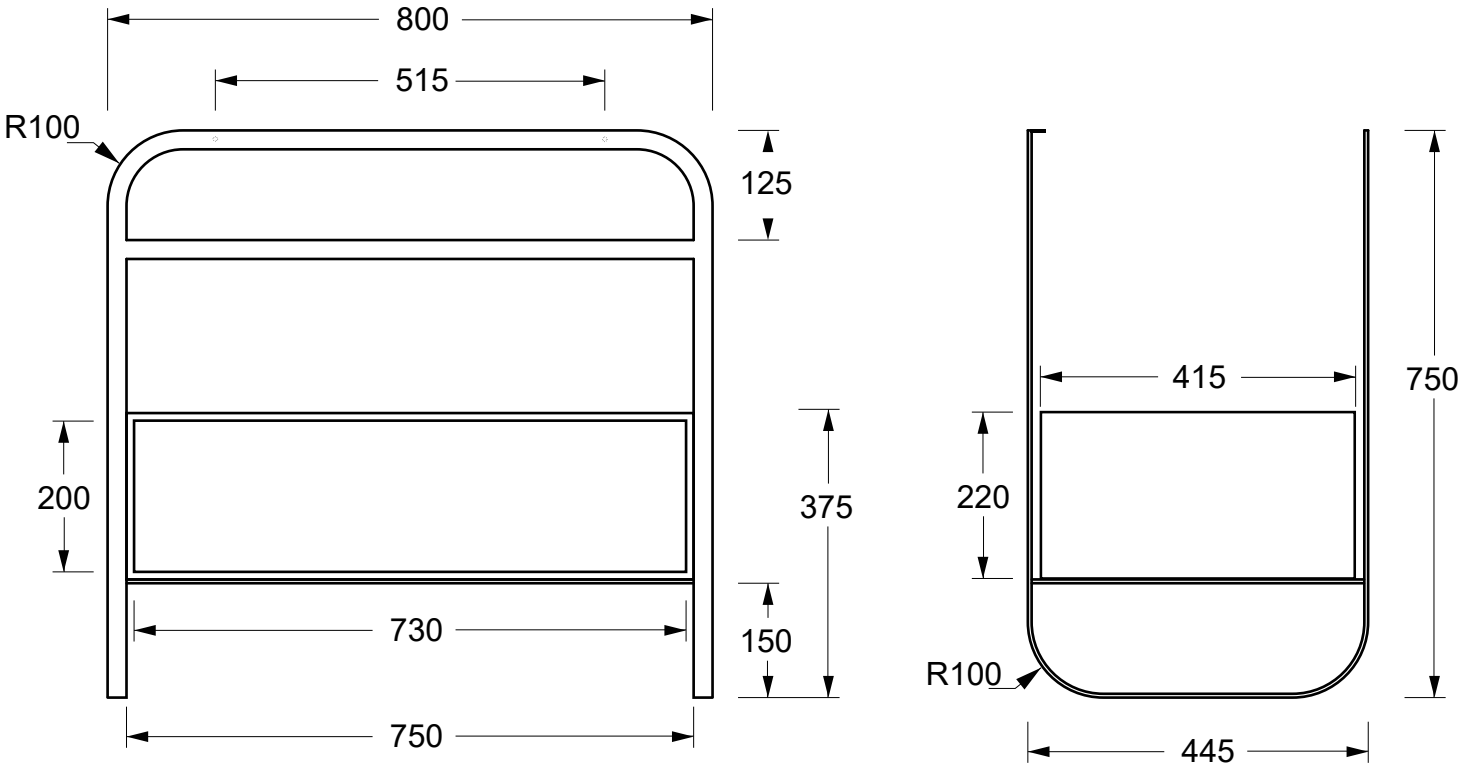

TECNICAL SHEET nº: 00	DESIGNER: MANUEL DI GIACOBBE		CODE:	
SHEET FORMAT: A4	ISO	REVISION: 00	SCALE: 1:10	DATE: 06/07/2023
REGULATION:				Pg: 1/1
All the measurements respect the tollerances provided by the Alice Ceramica srl.				

Alice Ceramica srl
Via Sassacci, 17 - 01033
Civita Castellana (VT), Italy
Tel [+39] 0761.598.328 [+39] 0761.513.252
Fax [+39]0761.540.352
www.aliceceramica.com - info@aliceceramica.it

* Regulations here shown are exclusively referred to ceramic items

Lunaris

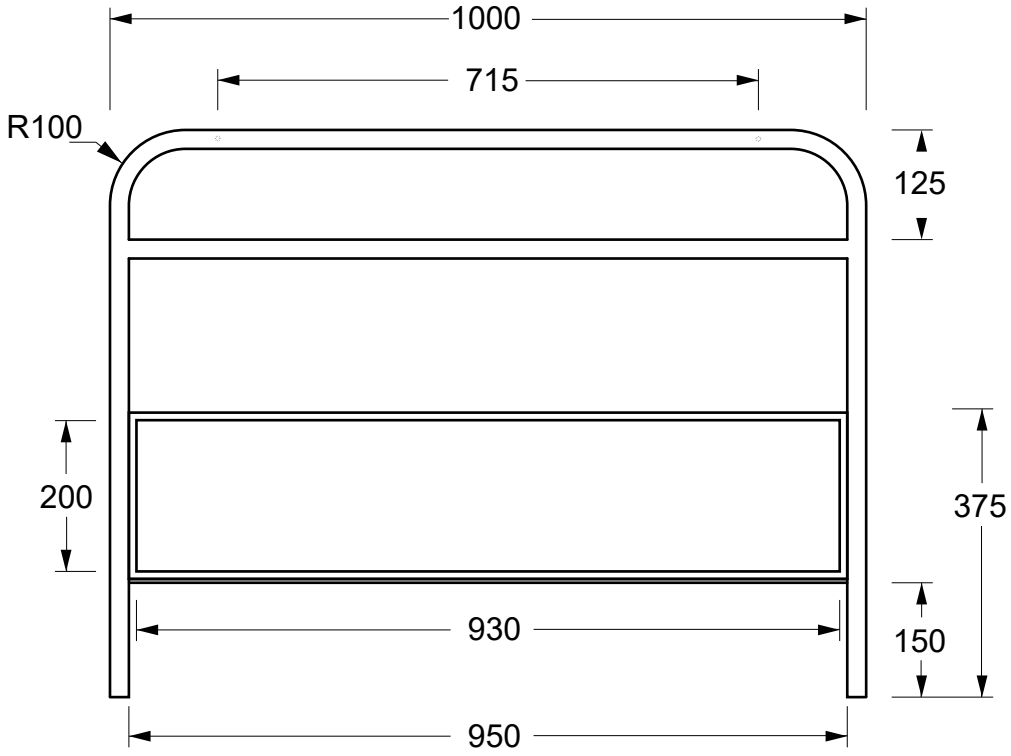

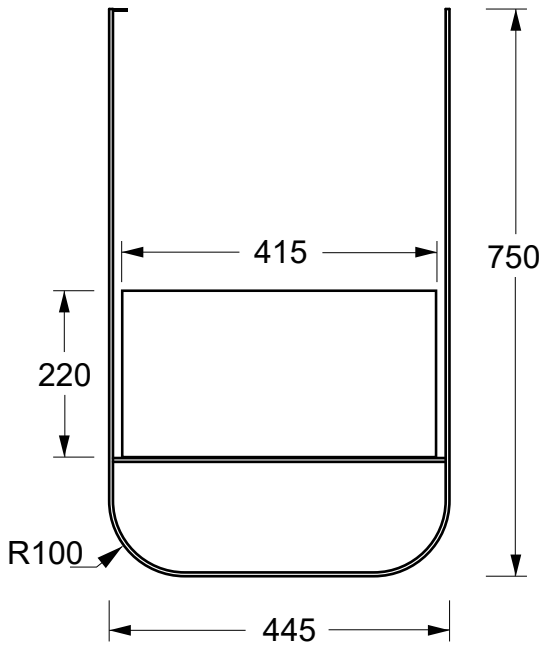

TECNICAL SHEET n°: 00	DESIGNER: MANUEL DI GIACOBBE		CODE:	
SHEET FORMAT: A4	ISO	REVISION: 00	SCALE: 1:10	DATE: 06/07/2023
REGULATION:				Pg: 1/1
All the measurements respect the tollerances provided by the Alice Ceramica srl.				

Alice Ceramica srl
Via Sassacci, 17 - 01033
Civita Castellana (VT), Italy
Tel [+39] 0761.598.328 [+39] 0761.513.252
Fax [+39]0761.540.352
www.aliceceramica.com - info@aliceceramica.it

* Regulations here shown are exclusively referred to ceramic items

alice

Lunaris

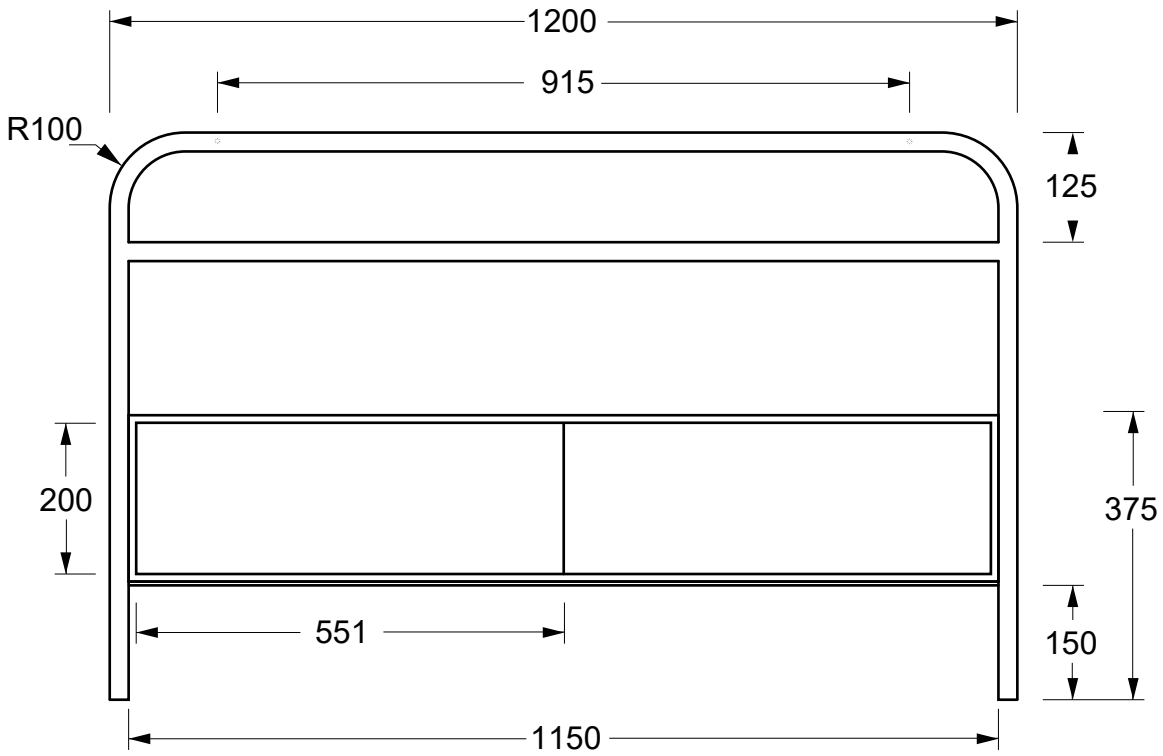

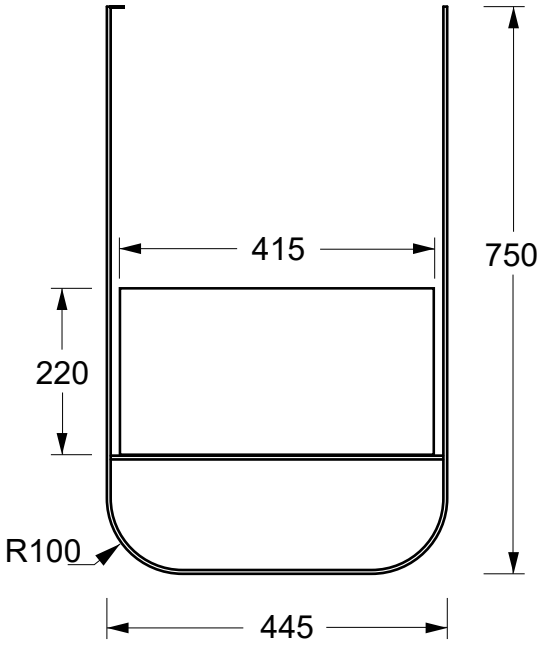

TECNICAL SHEET nº: 00	DESIGNER: MANUEL DI GIACOBBE		CODE:	
SHEET FORMAT: A4	ISO	REVISION: 00	SCALE: 1:10	DATE: 06/07/2023
REGULATION:				Pg: 1/1
All the measurements respect the tollerances provided by the Alice Ceramica srl.				

Alice Ceramica srl
Via Sassacci, 17 - 01033
Civita Castellana (VT), Italy
Tel [+39] 0761.598.328 [+39] 0761.513.252
Fax [+39]0761.540.352
www.aliceceramica.com - info@aliceceramica.it

* Regulations here shown are exclusively referred to ceramic items

Lunaris

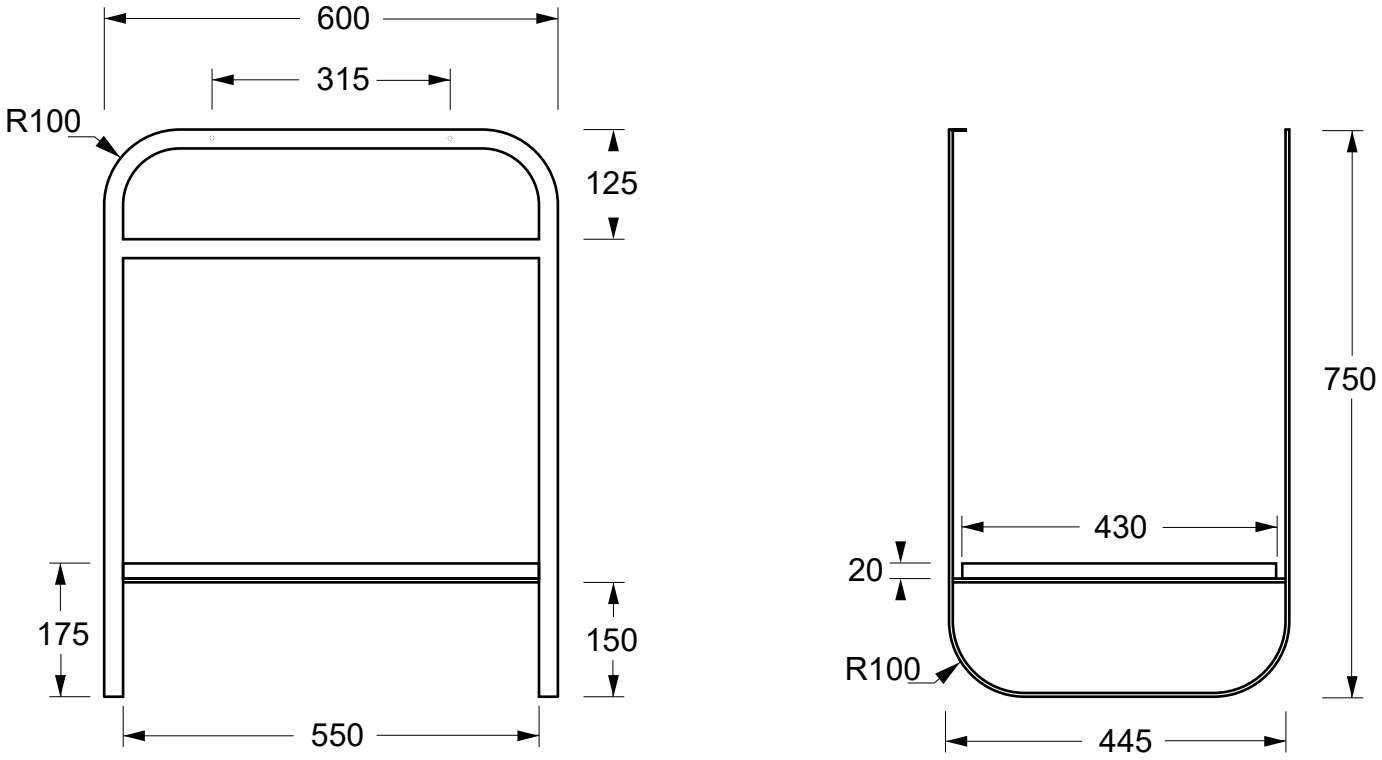

TECNICAL SHEET n°: 00	DESIGNER: MANUEL DI GIACOBBE		CODE:	
SHEET FORMAT: A4	ISO	REVISION: 00	SCALE: 1:10	DATE: 06/07/2023
REGULATION:				Pg: 1/1
All the measurements respect the tollerances provided by the Alice Ceramica srl.				

Alice Ceramica srl
Via Sassacci, 17 - 01033
Civita Castellana (VT), Italy
Tel [+39] 0761.598.328 [+39] 0761.513.252
Fax [+39]0761.540.352
www.aliceceramica.com - info@aliceceramica.it

* Regulations here shown are exclusively referred to ceramic items

alice

Lunaris

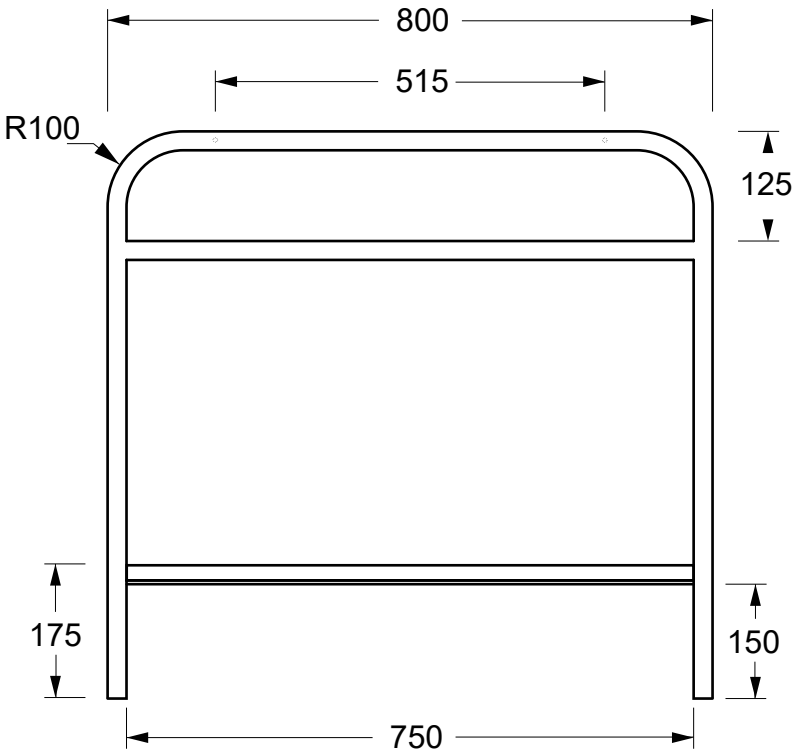

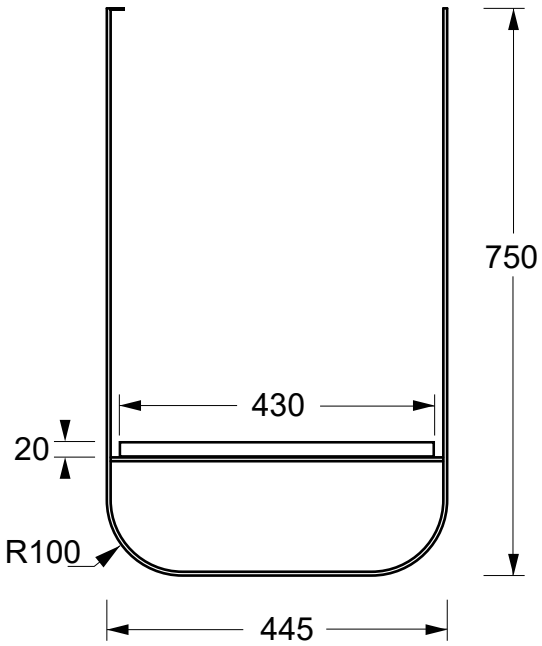

TECNICAL SHEET nº: 00	DESIGNER: MANUEL DI GIACOBBE		CODE:	
SHEET FORMAT: A4	ISO	REVISION: 00	SCALE: 1:10	DATE: 06/07/2023
REGULATION:				Pg: 1/1
All the measurements respect the tollerances provided by the Alice Ceramica srl.				

Alice Ceramica srl
Via Sassacci, 17 - 01033
Civita Castellana (VT), Italy
Tel [+39] 0761.598.328 [+39] 0761.513.252
Fax [+39]0761.540.352
www.aliceceramica.com - info@aliceceramica.it

* Regulations here shown are exclusively referred to ceramic items

Lunaris

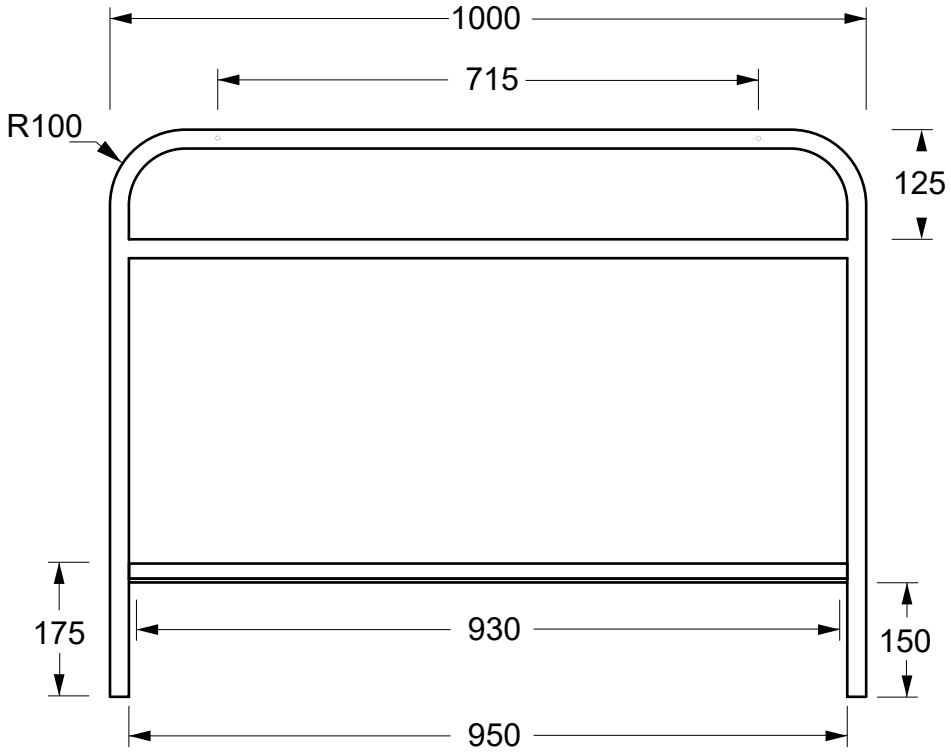

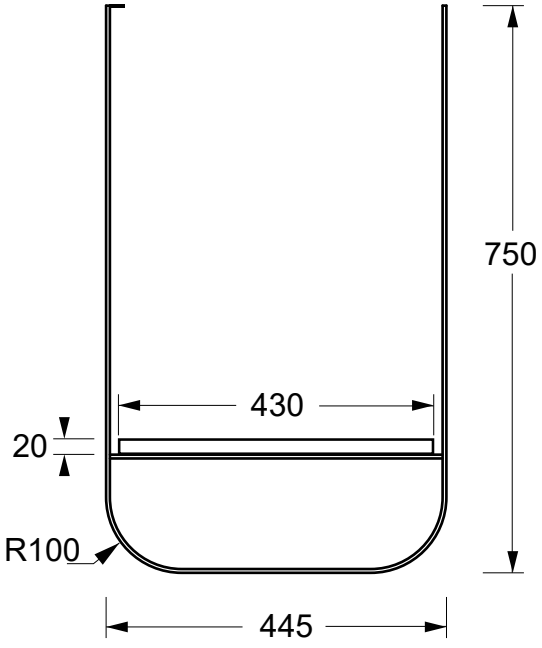

TECNICAL SHEET nº: 00	DESIGNER: MANUEL DI GIACOBBE		CODE:	
SHEET FORMAT: A4	ISO	REVISION: 00	SCALE: 1:10	DATE: 06/07/2023
REGULATION:				Pg: 1/1
All the measurements respect the tollerances provided by the Alice Ceramica srl.				

Alice Ceramica srl
Via Sassacci, 17 - 01033
Civita Castellana (VT), Italy
Tel [+39] 0761.598.328 [+39] 0761.513.252
Fax [+39]0761.540.352
www.aliceceramica.com - info@aliceceramica.it

* Regulations here shown are exclusively referred to ceramic items

alice

Lunaris

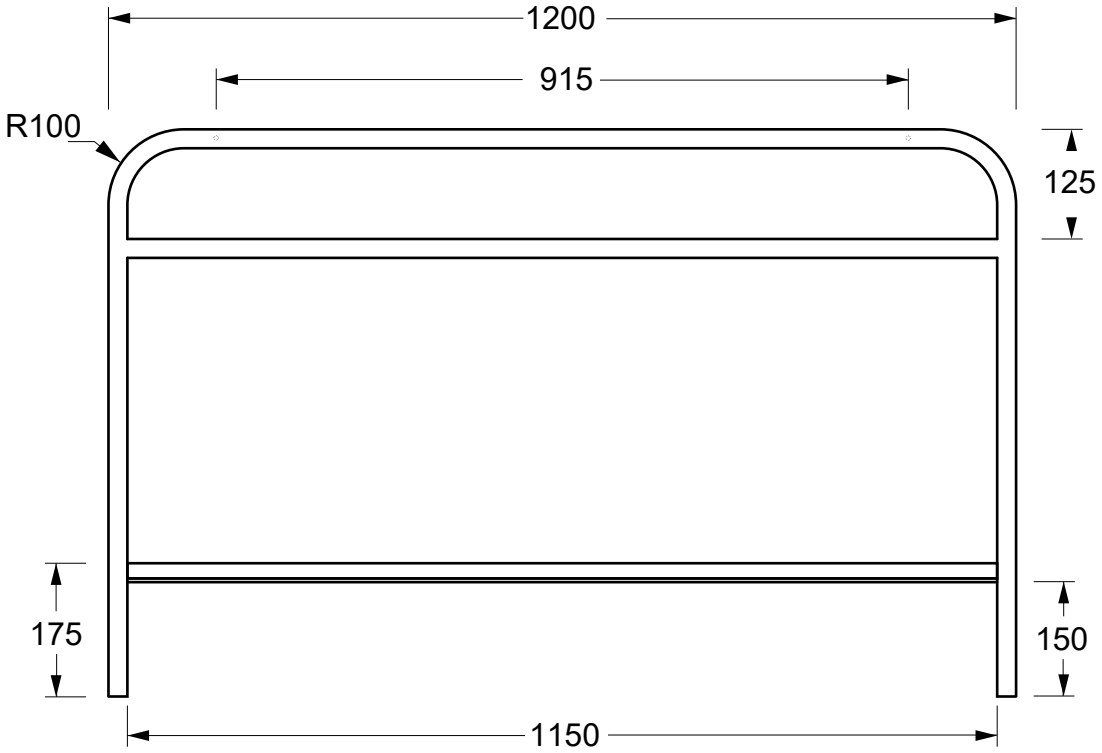

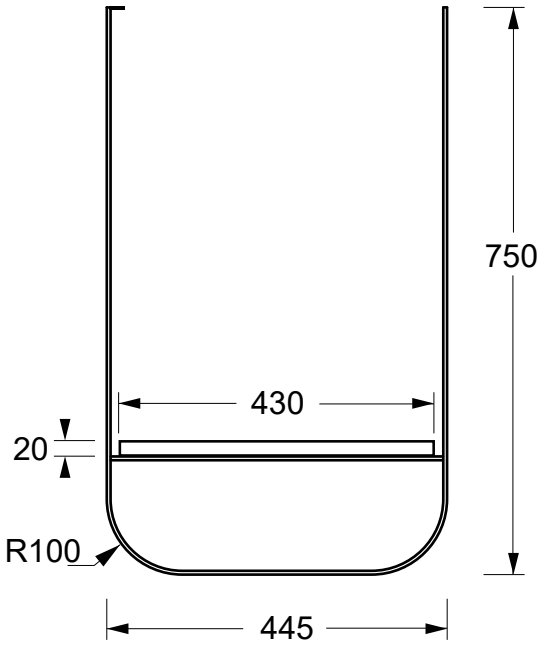

TECNICAL SHEET nº: 00	DESIGNER: MANUEL DI GIACOBBE		CODE:	
SHEET FORMAT: A4	ISO	REVISION: 00	SCALE: 1:10	DATE: 06/07/2023
REGULATION:				Pg: 1/1
All the measurements respect the tollerances provided by the Alice Ceramica srl.				

Alice Ceramica srl
Via Sassacci, 17 - 01033
Civita Castellana (VT), Italy
Tel [+39] 0761.598.328 [+39] 0761.513.252
Fax [+39]0761.540.352
www.aliceceramica.com - info@aliceceramica.it

* Regulations here shown are exclusively referred to ceramic items