NM2K-26
Kitchen Faucet

Non-metallic - 2 Handle
NSF 61-9 and ASME A112.18.1 Approved

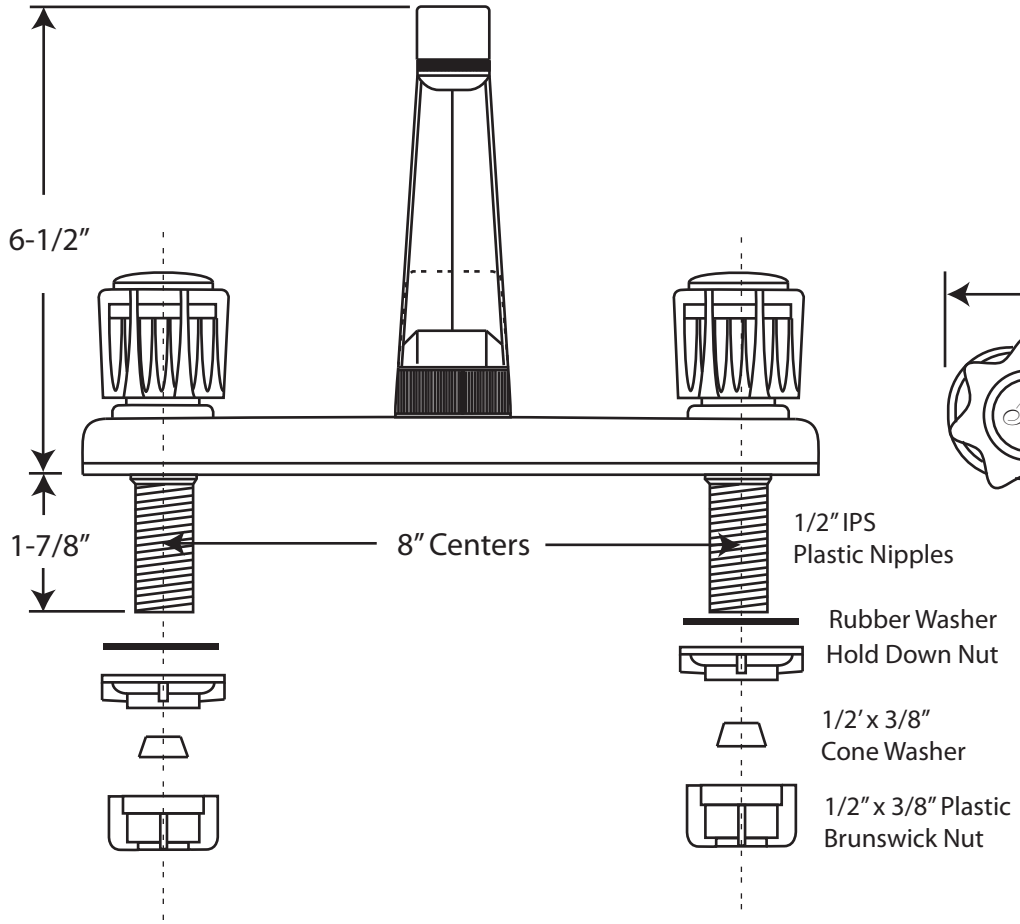

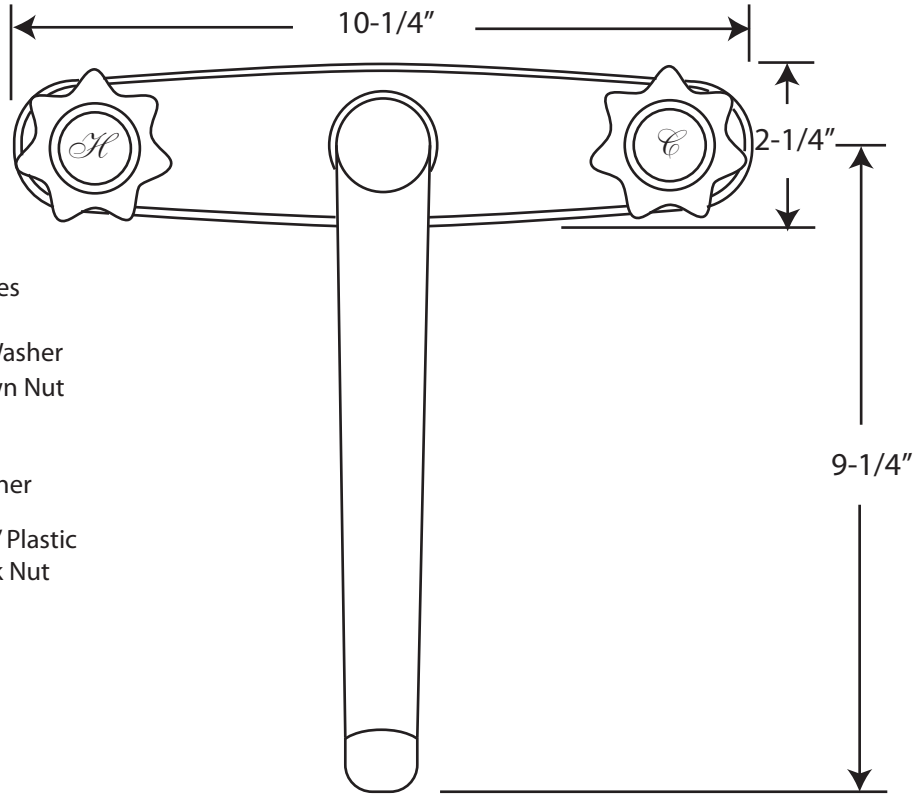

WESTBRASS
Fine Decorative Plumbing Since 1935

2429 East Olympic Blvd. Los Angeles, CA 90021
213-627-8441 • FAX 213-627-2844 • www.westbrass.com