PART NO. F-100	SPECIFICATION SHEET	NSF Approved Water Filter

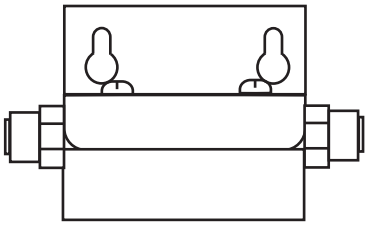

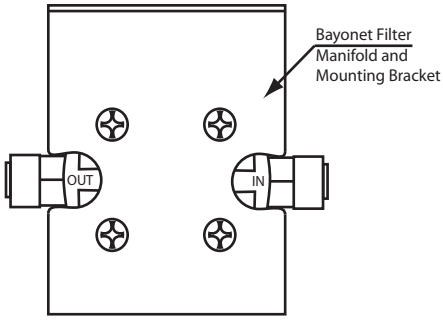

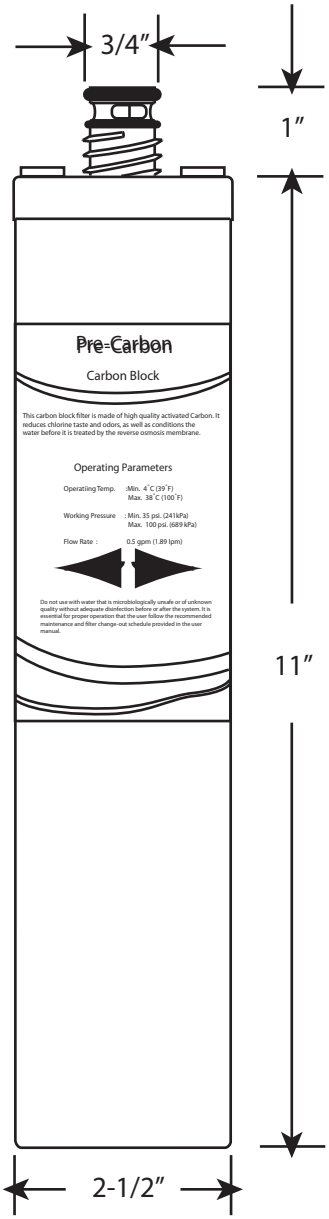

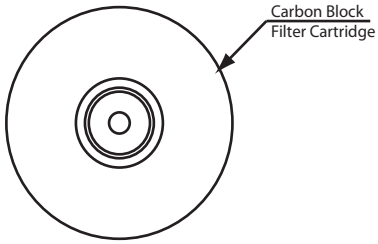

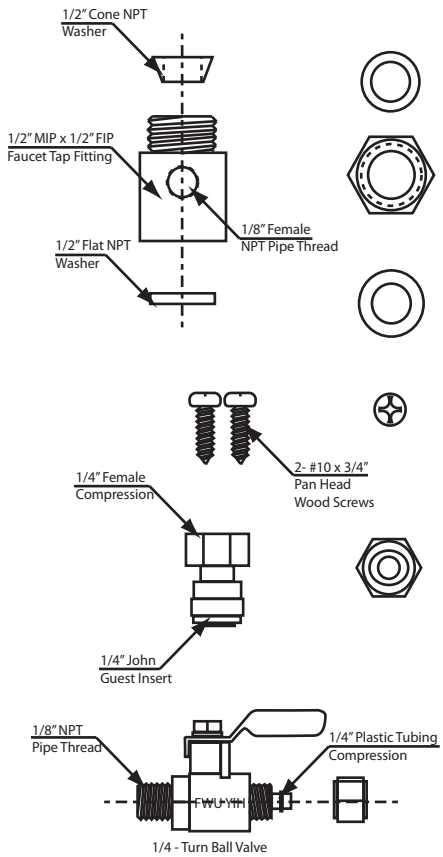

Mounting Accessories