493244H
Sch. 40 PVC Tip-Toe
Illutionary No Hole Overflow

Westbrass/ Hydro Systems

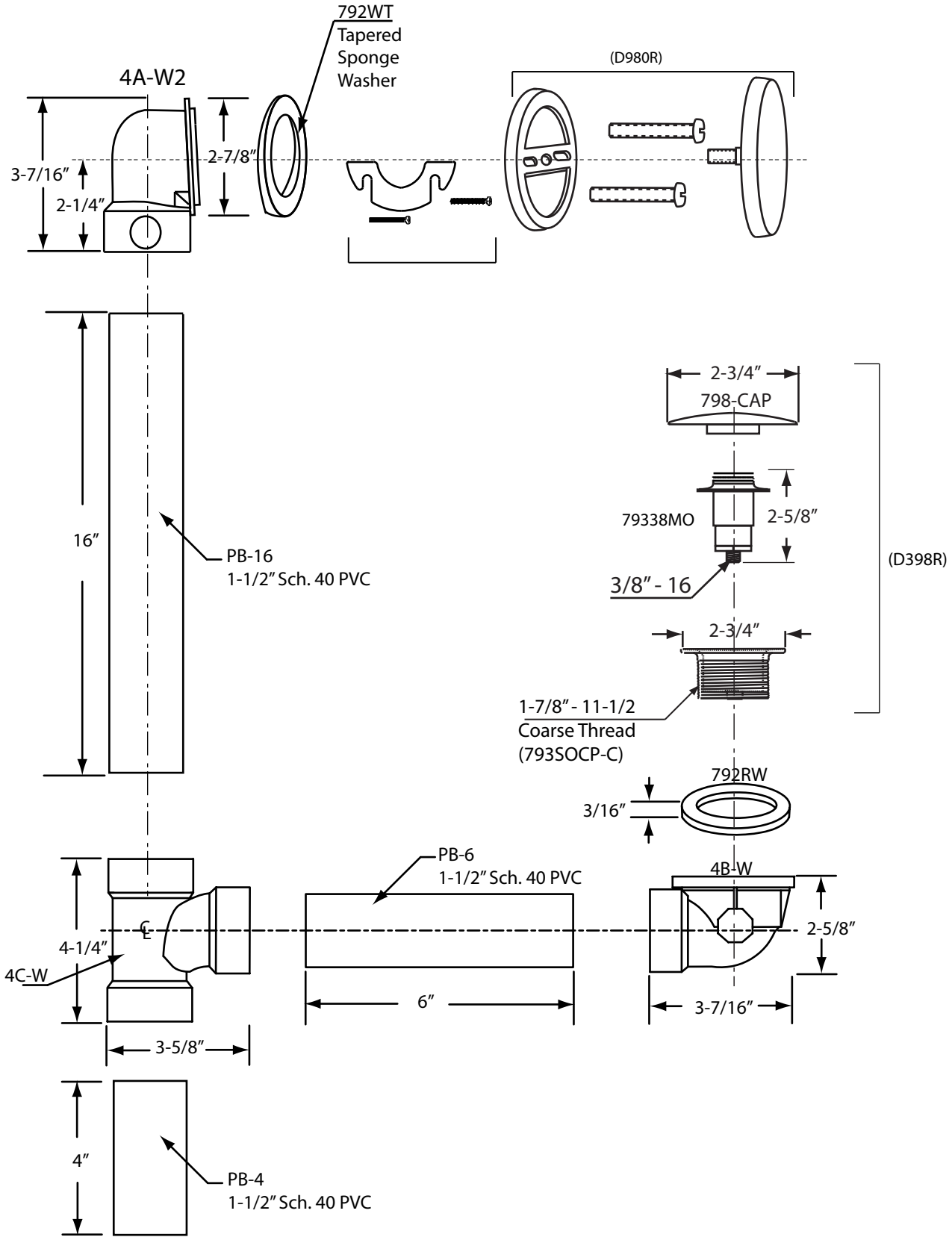

WESTBRASS
Fine Decorative Plumbing Since 1935
2429 East Olympic Blvd. Los Angeles, CA 90021
213-627-8441 • FAX 213-627-2844 • www.westbrass.com