PARCHE KITCHEN FAUCET - 4 PIECE SUITE

Model # 3800-4

- Max Counter Thickness 2-3/8”
- Minimum Install Hole Size 1-3/8"

A. Spray Connection with 3/8″ Compression Fitting

B. Supply Hoses - 20″ Long with 3/8″ Compression Fittings

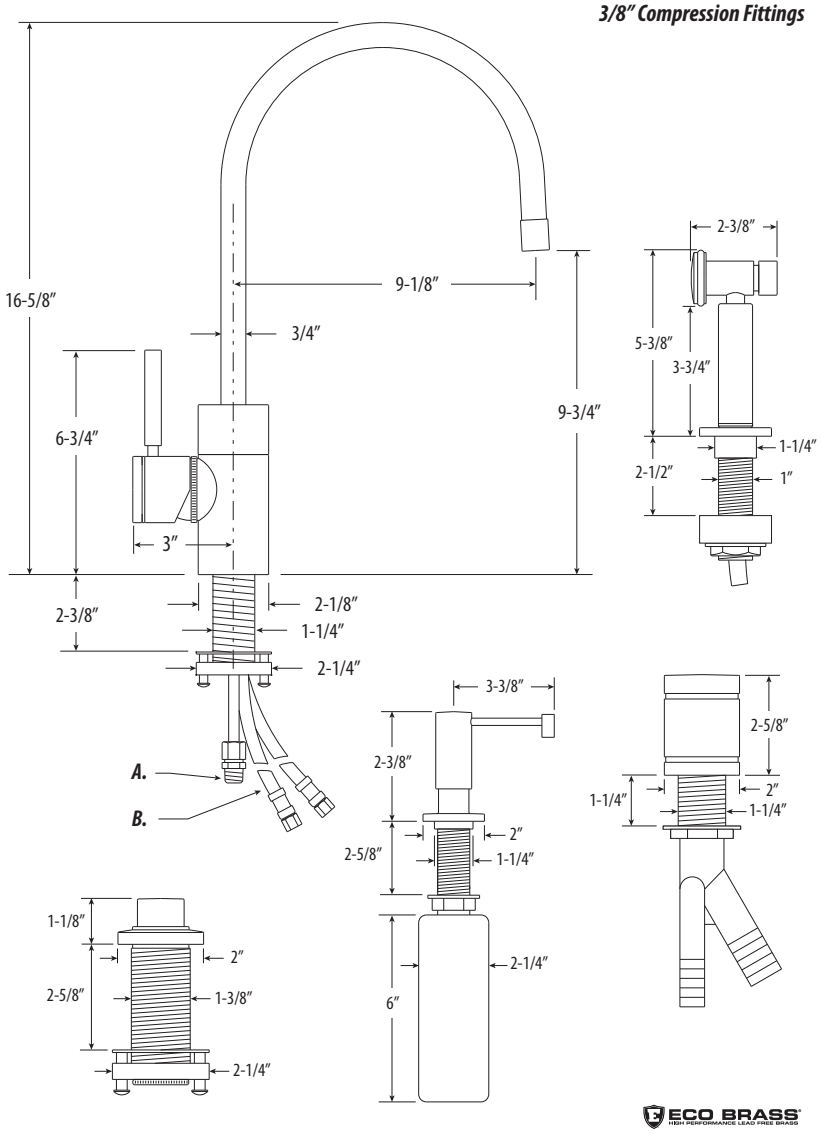

PRODUCT DESCRIPTION

- Suite includes Side Spray, Soap/Lotion Dispenser, Air Switch and Single Port Air Gap.
- Classic C-spout with **9-1/8”** reach.
- Part of the Parche Contemporary Suite.
- Spout swivels 360 degrees.
- Equipped with diverter for optional side spray.
- 1.75 gpm maximum flow rate with aerated tip.
- Aerated stream.
- Ergomanic single lever handle.
- Adjustable PTFE “Friction Lock” helps handle feel and prevents sag.
- Handle adjusts 22.5 degrees in either direction for back-splash clearance.
- Hot/Cold ceramic disk valve cartridge.
- Reversible and removable hot/ring ring indicator.
- Created from quality solid brass or stainless steel.
- Compatible with Reverse Osmosis filtration systems.
- Reinforced braided connection hoses.
- Lifetime functional warranty.
- Made in America.

CODES/STANDARDS APPLICABLE

Specified model meets or exceeds the following:

- **ASME A112.18.1**
- **CSA B125.1**
- **NSF 61, 372**
- **CALGreen**

AVAILABLE IN 30 FINISHES + SOLID STAINLESS STEEL

Antique Brass - AB
Antique Bronze - ABZ
Antique Copper - AC
American Bronze - AMB
Antique Pewter - AP
Gloss Black - GB
Black Nickel - BLN
Black-Oil Rubbed Bronze - ORB
Caribbean Bronze - CB
Chocolate Bronze - CHB
Chrome - CH
Classic Bronze - CLZ
Distressed Antique Brass - DAB
Distressed Antique Copper - DAC
Distressed American Bronze - DAMB
Distressed Antique Pewter - DAP
Matte Black - MB
Polished Brass - PB
Polished Copper - PC
Polished Gold - PG
Polished Nickel - PN
Satin Brass - SB
Satin Chrome - SC
Satin Gold - SG
Satin Nickel - SN
*Stainless Steel - SS**
Tuscan Brass - TB
Unlaquered Polished Brass - UPB
Venetian Bronze - VB
Weathered Brass - WB
Weathered Copper - WC

41180 Raintree Court • Murrieta, CA 92562 • 1-888-304-0660 • Fax 951-304-0525 • www.waterstoneco.com

***Contemporary Styles Only**

REVISED: 2-22-18