SIGMA
Designer Faucetry

TechData

SPECIFICATIONS

Series 3400

1.344808S
Nova II
Short Widespread Lavatory Set

FEATURES:

- All brass construction. Flexible hoses designed to be installed on 8” to 16” centers. Includes soft touch drain assembly P/N 18.11.052.
- Cross handle style with inside screw attachment.
- 20 PT. 1/4-turn ceramic disc valve cartridge.
- Available in all finishes. Warranty varies according to finish selection.
- Standard aerator is limited to 1.2 gpm.
- Certified to meet or exceed the following codes and standards: ASME A112.18.1/CSAB 125.1-2012

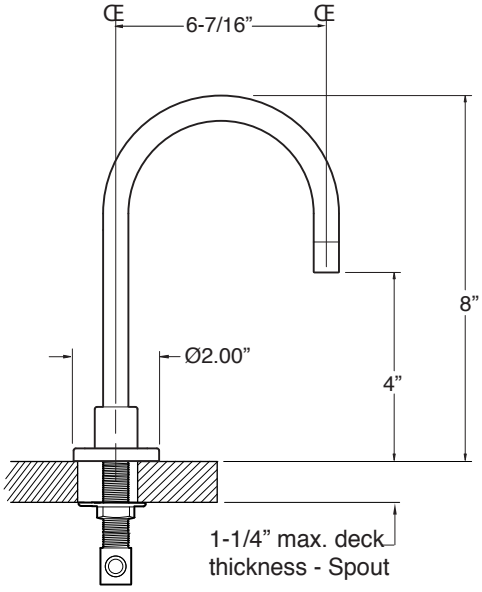

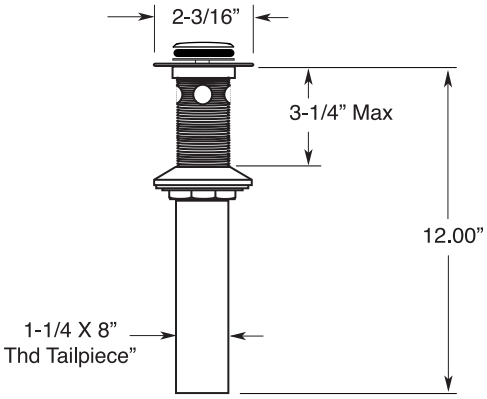

SOFT TOUCH
DRAIN ASSEMBLY
P/N 18.11.052

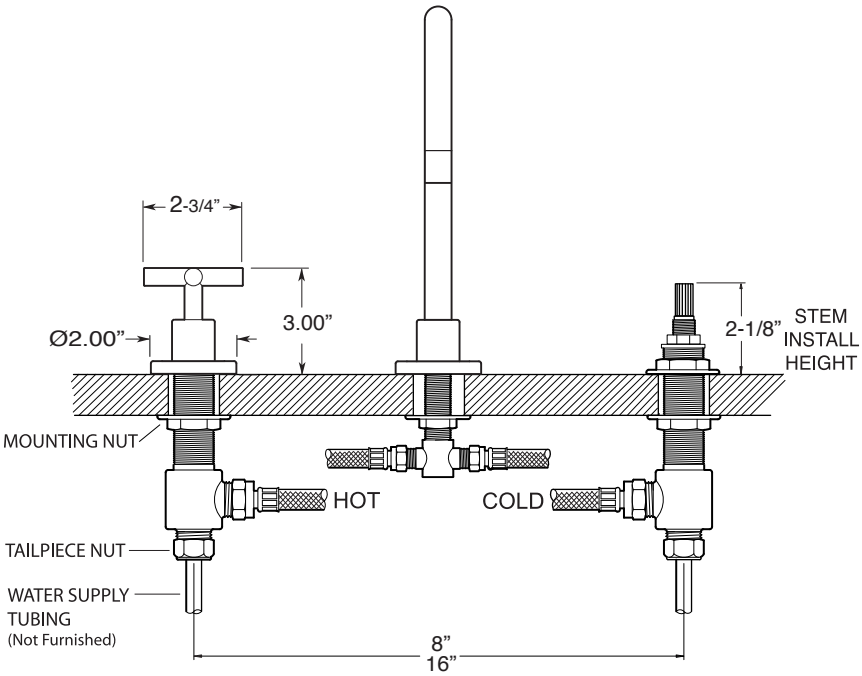

NOTE: Spout and valves install through 1-1/4” diameter holes

Note: Measurements are subject to change or cancellation. No responsibility is assumed for use of superseded or voided pages.