Riviera ShowerSpa

Model # 7001-CH & #7001-BN

297 Anna St. | Watsonville, CA 95076
Toll Free: 888.785.7320
www.PulseShowerSpas.com

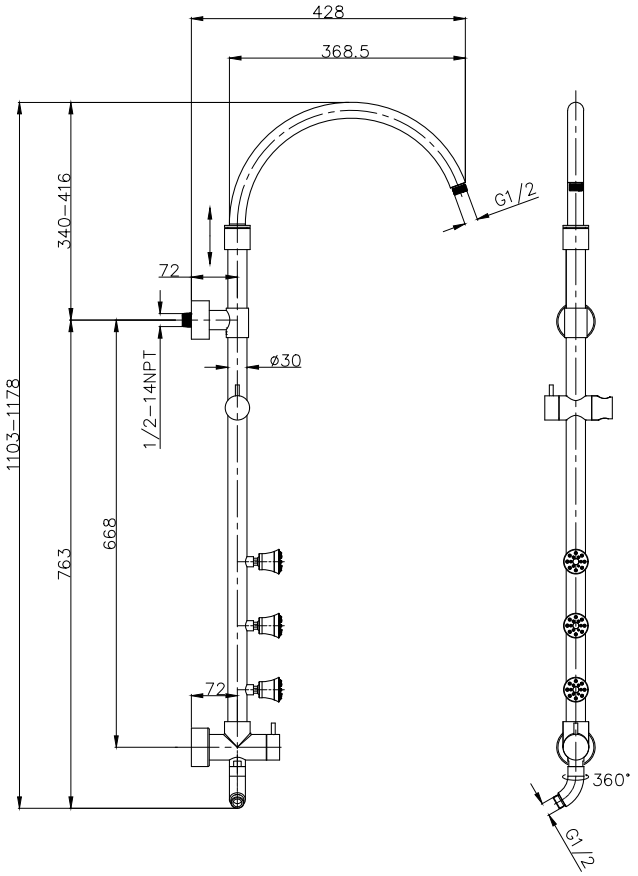

PRODUCT FEATURES

- Surface mounted and completely pre-plumbed, easily retrofit your existing shower
- Available in chrome or brushed-nickel
- Pivoting shower arm with 3 inches of height adjustment
- 8 inch Rain showerhead with soft tips to clear mineral buildup for long lasting performance
- Five-function hand shower with 59 inch double-interlocking stainless steel hose
- Convenient lower diverter
- 3 body sprays

SPECIFICATIONS

- 2.5 GPM/9.5 LPM Shower System

DIAMOND LINE
BY PULSE SHOWERSPAS