Pro Series Collection

16 Gauge Stainless Farmhouse Apron Sink

Nantucket SINKS

MODEL:

EZAPRON30

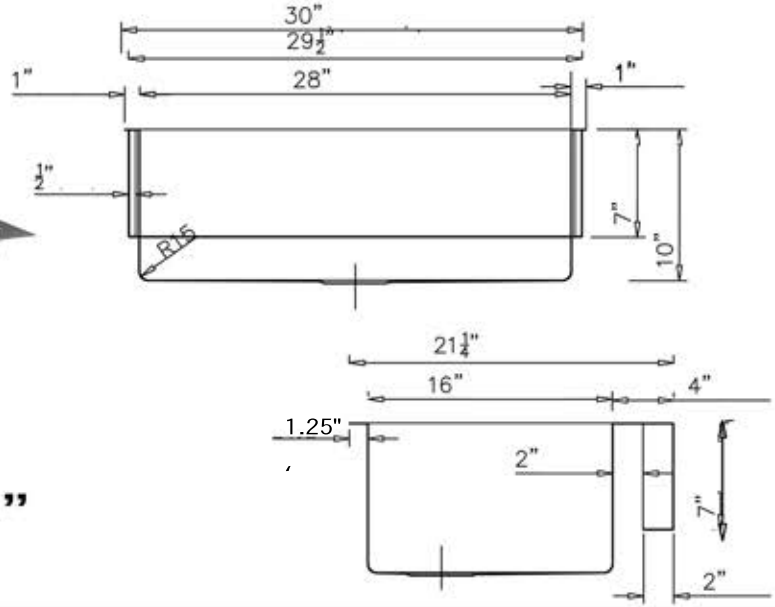

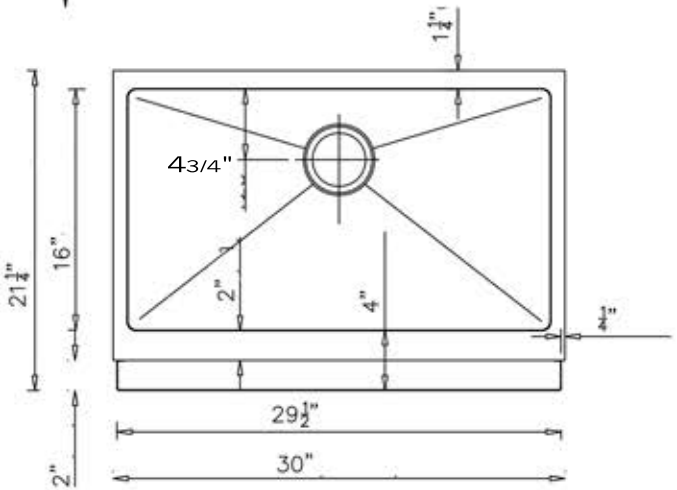

"PATENTED" DESIGN

Overall Dimensions	Large Bowl	Apron Height	Bowl Depth	Drain Dimensions
30" x 21.25"	**28" x 16"**	**7"**	**10"**	**3.5" Opening**

Features:

- Premium 304, 16 gauge Stainless Steel Kitchen Sink
- Available Grid - BG2818 (not included)
- Brushed Satin Finish
- Limited Lifetime Manufacturers Warranty
- Insulated to Reduce Condensation
- Rubber Padding is Applied for Noise Reduction
- EASY Installation (Use Existing Cabinet)
- Template Not Included

PROJECT/ NAME:

ARCHITECT/CONTRACTOR:

MODEL:

JOB NOTES:

ATTENTION!

Designed for framed cabinets. The distance from cabinet top to the cabinet door must be greater than seven inches.