# GKTS1515

Stainless Steel Self Rimming Single Bowl Bar Sink, 2 Holes, (L)15" X (W)15" X (D)5-1/2"
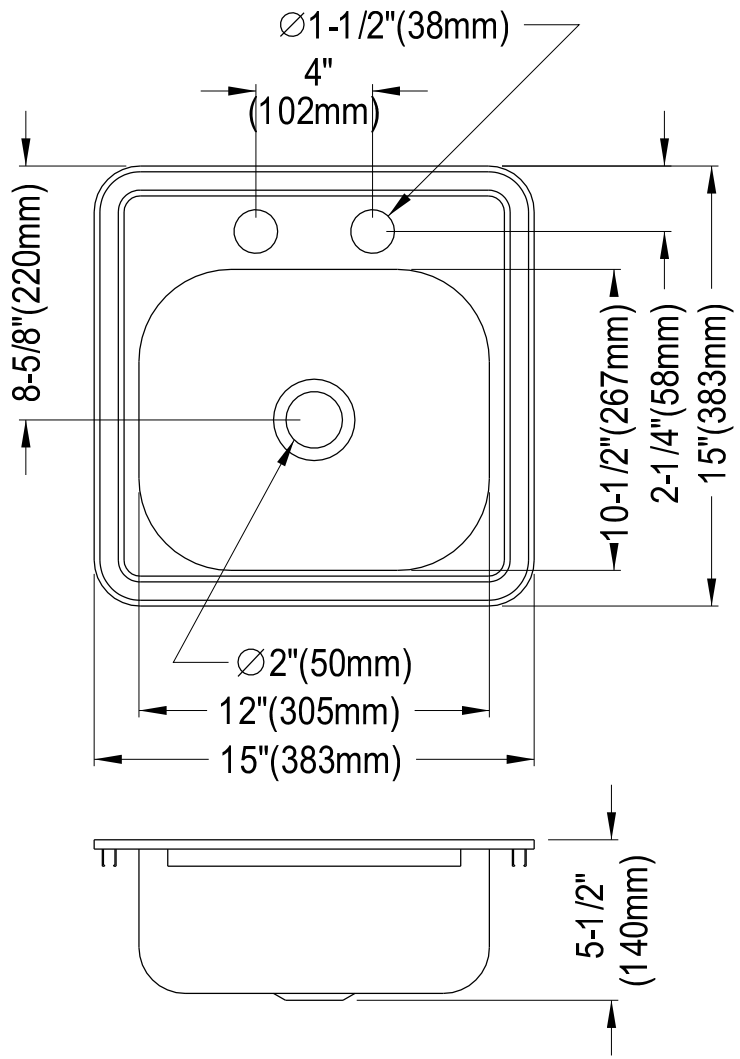
| Depth | SS Type | Thickness |
|---|---|---|
| 5-1/2" | 18-10 304 Grade | 0.48mm |