GKTD33197

Stainless Steel Self Rimming Double Bowl Kitchen Sink, 4 Holes, (L)33" X (W)19" X (D)7"
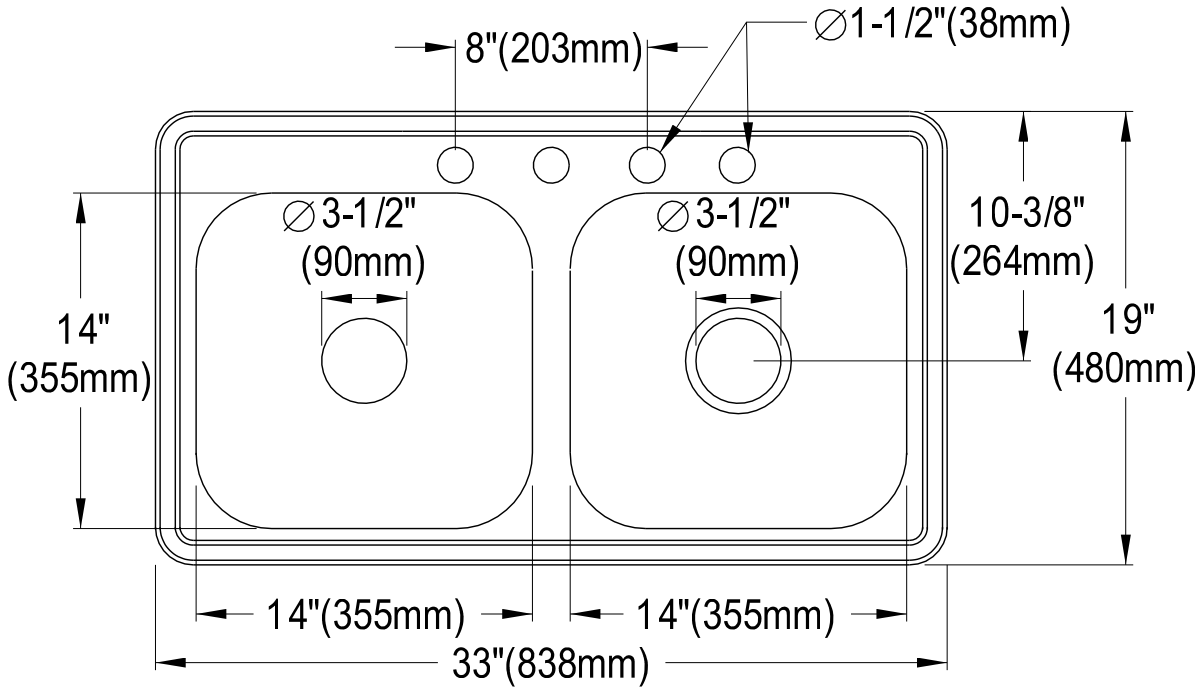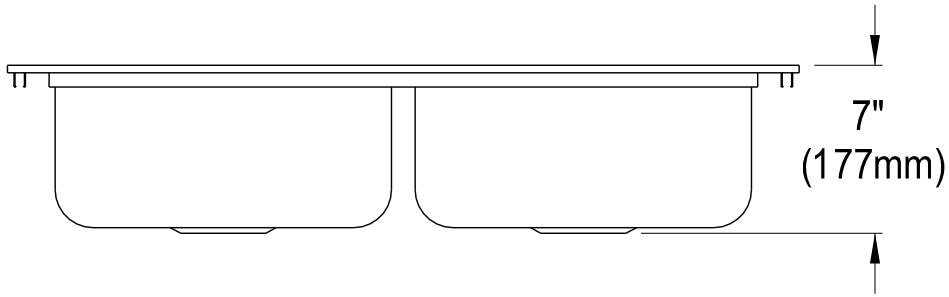
Depth	SS Type	Thickness
7"	18-10 304 Grade	0.68mm