KB711,5,8,9AXSP
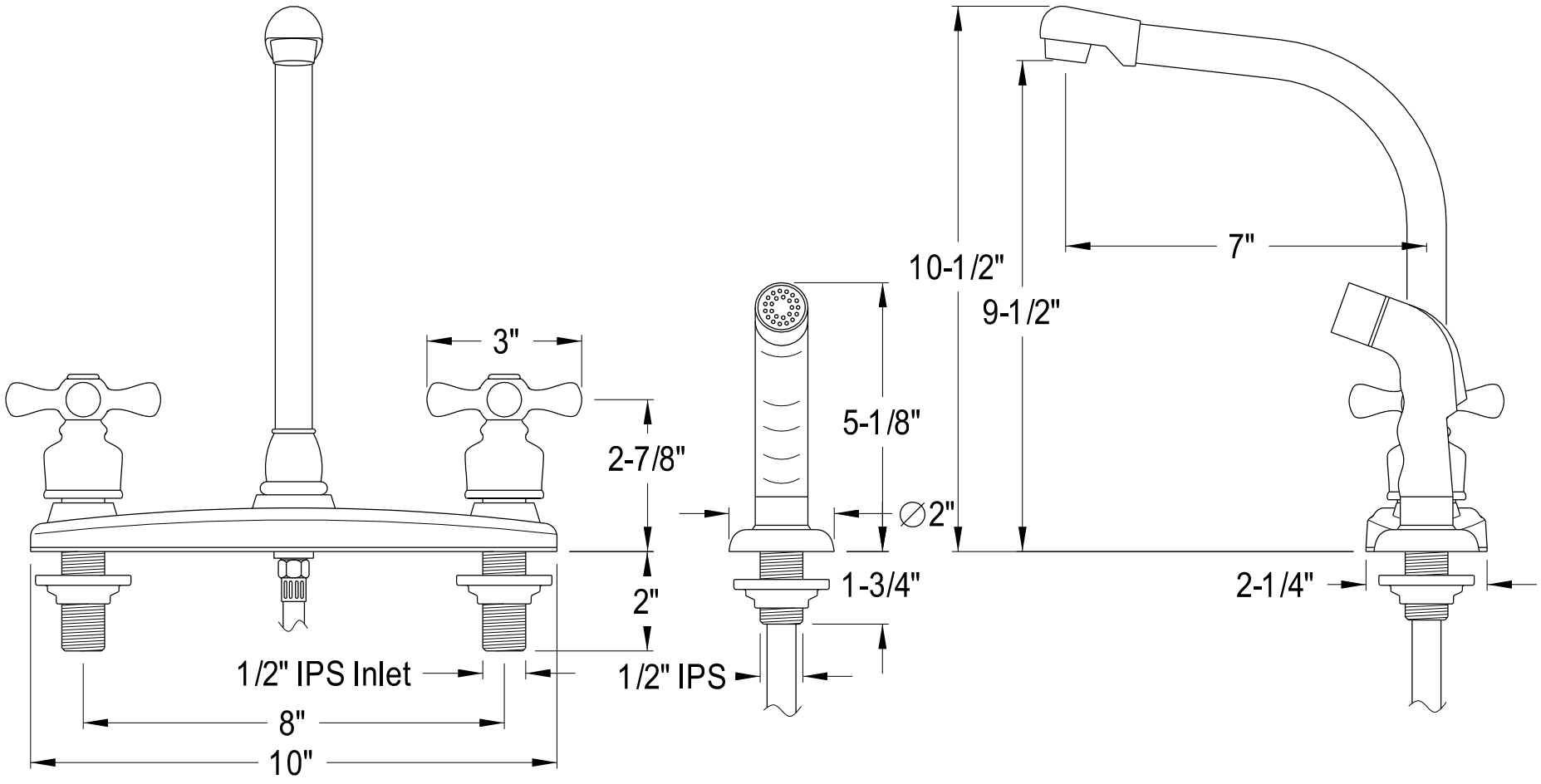
Victorian High Arch Kitchen Faucet With Metal Cross Handle & Plastic Sprayer