KALLISTA®

For Town Showerhead With Arm

P21440, P21441, P21444

FEATURES

- *Solid Brass Construction for Durability and Reliability*
- *2.5 GPM (9.5 LPM)*
- *1/2"-14 NPT Connection*
- *Coordinates with the For Town and For Country Collections*

CODES/STANDARDS APPLICABLE

Specified Model Meets or Exceeds the Following:

- *ASME A112.18.1-2005/CSA B125.1-05*

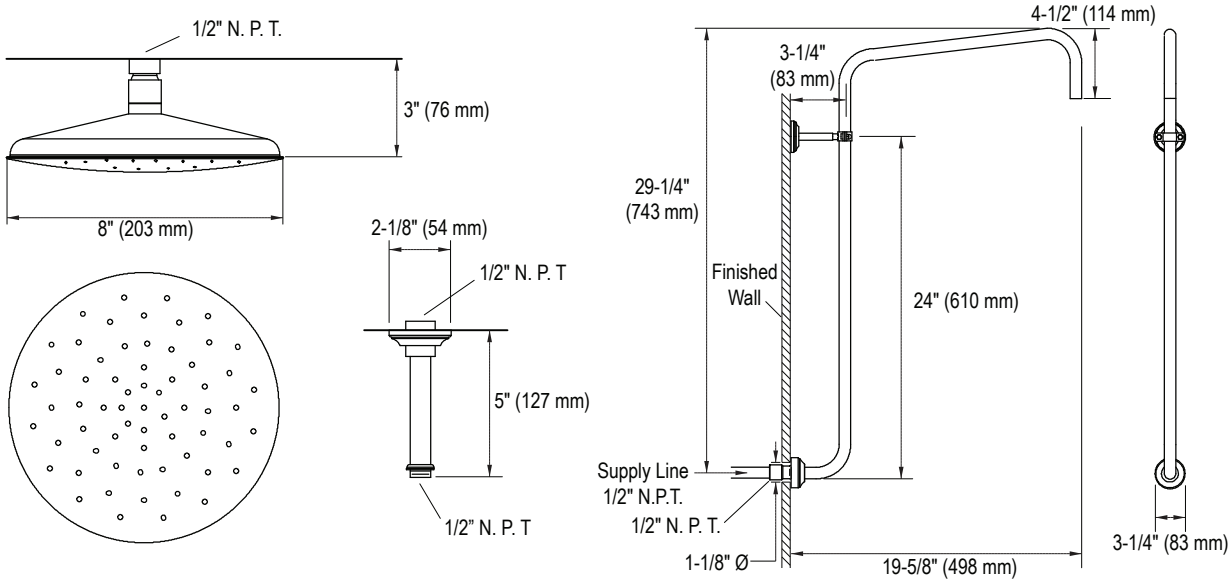

SPECIFIED MODEL			
Model	Description	Finishes	
P21440-00	For Town Showerhead	❑ CP Polished Chrome ❑ AG Brushed Nickel	❑ AD Nickel Silver
P21441-00	For Town Wall Shower Arm	❑ CP Polished Chrome ❑ AG Brushed Nickel	❑ AD Nickel Silver
Optional Accessory			
P21444-00	For Town Ceiling Shower Arm	❑ CP Polished Chrome ❑ AG Brushed Nickel	❑ AD Nickel Silver

We reserve the right to make revisions without notice in the design of products or in packaging unless this right has specifically been waived at the time the order is accepted.

Questions? Problems? For additional assistance, please contact Kallista's Customer Service Department at 1-888-4KALLISTA (1-888-452-5547) or FAX 1-888-272-3094.