G-11210-LM70B

INCANTO ARTE Series

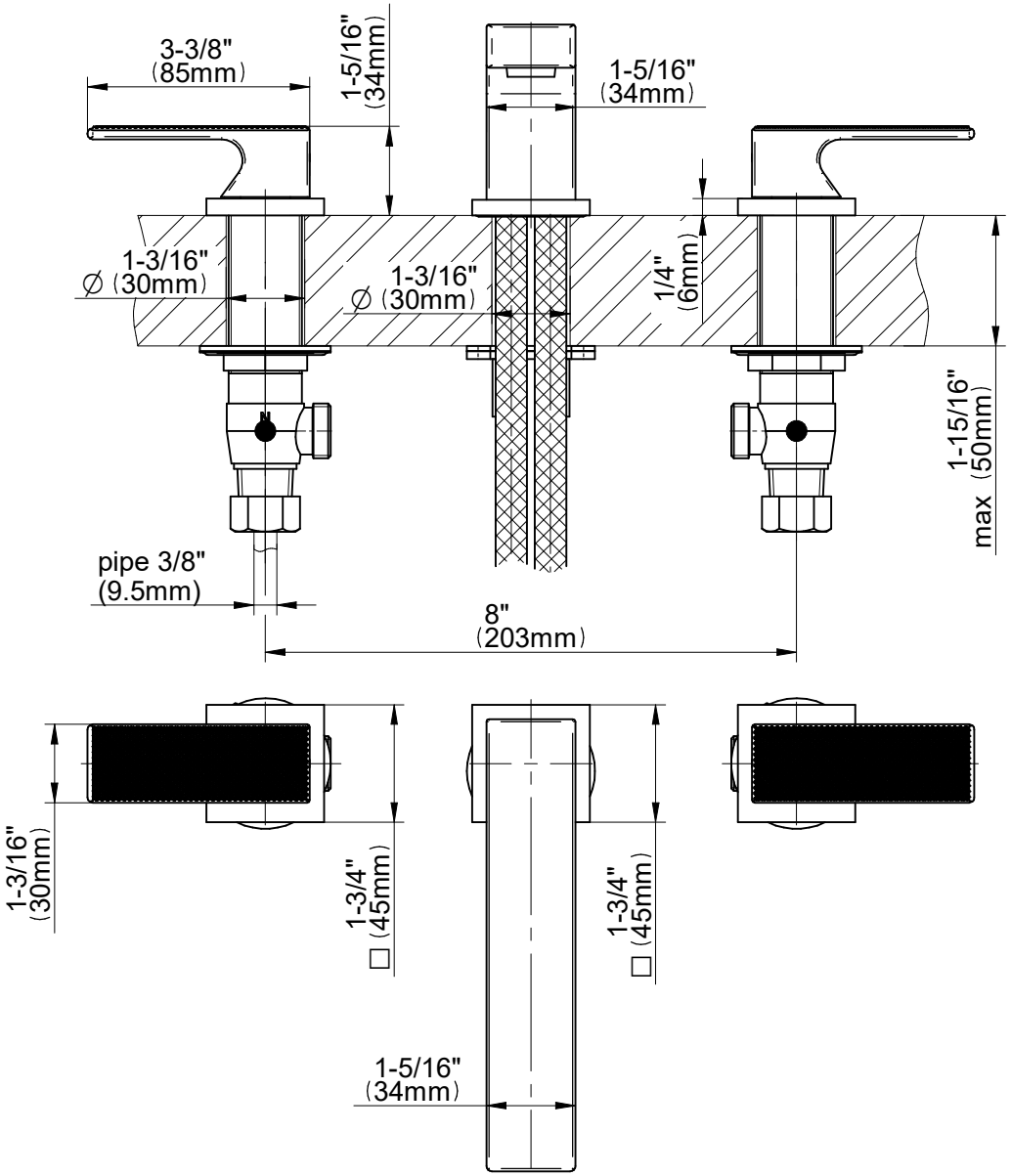

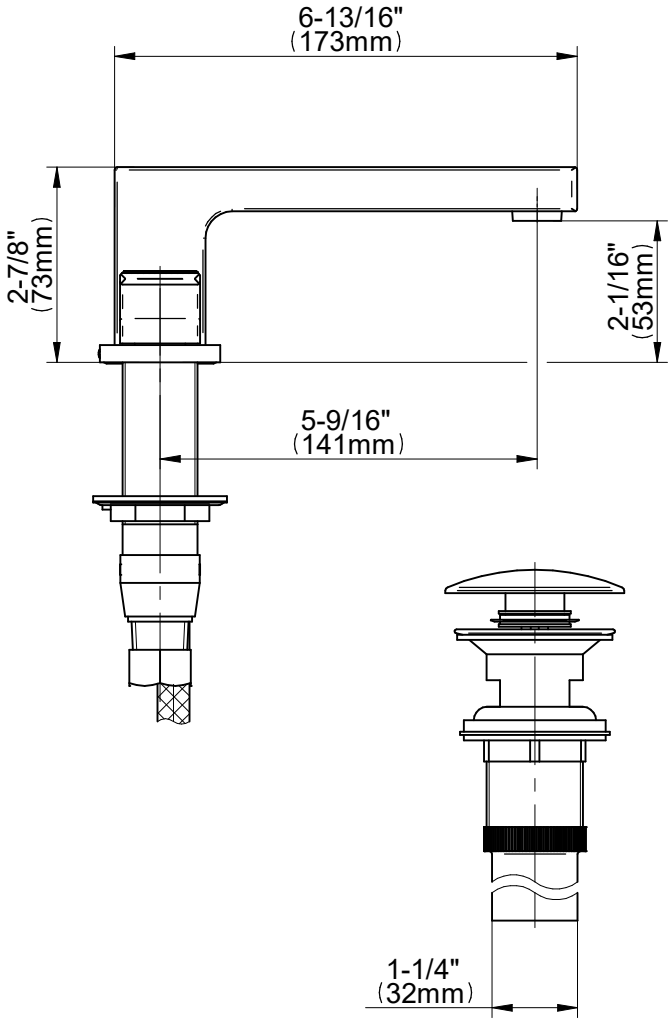

GRAFF®
Art of Bath