G-9208

Sento Series

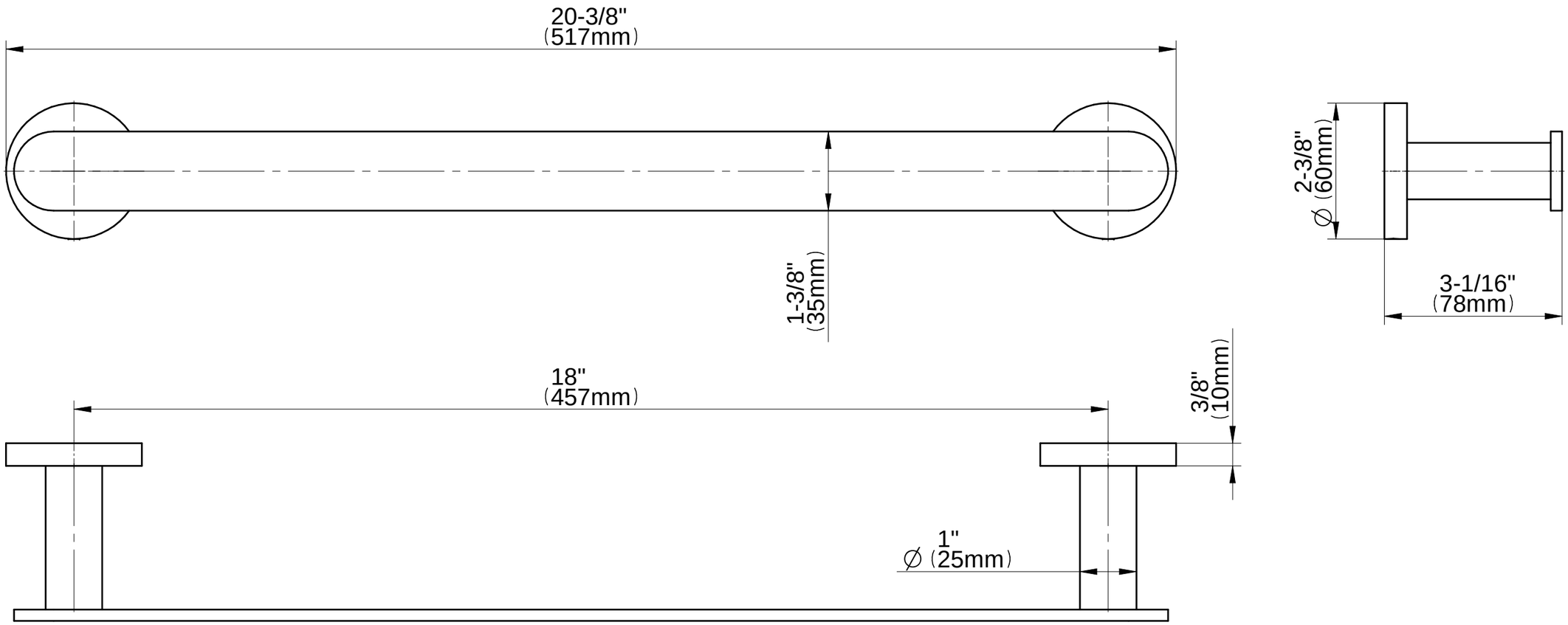

GRAFF®

CUTTING EDGE DESIGN