G-8078H-2C1L-T

Finezza Uno Series

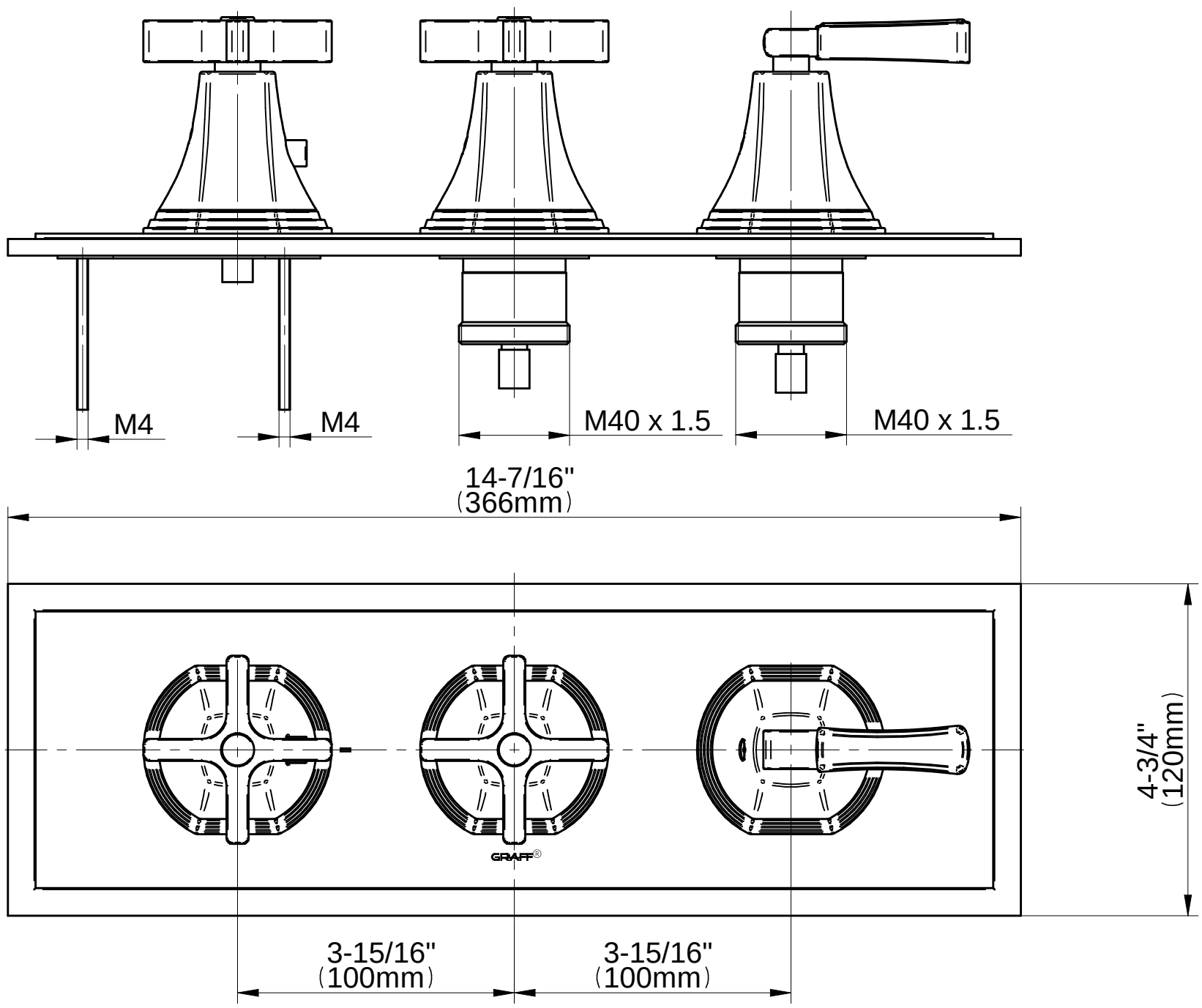

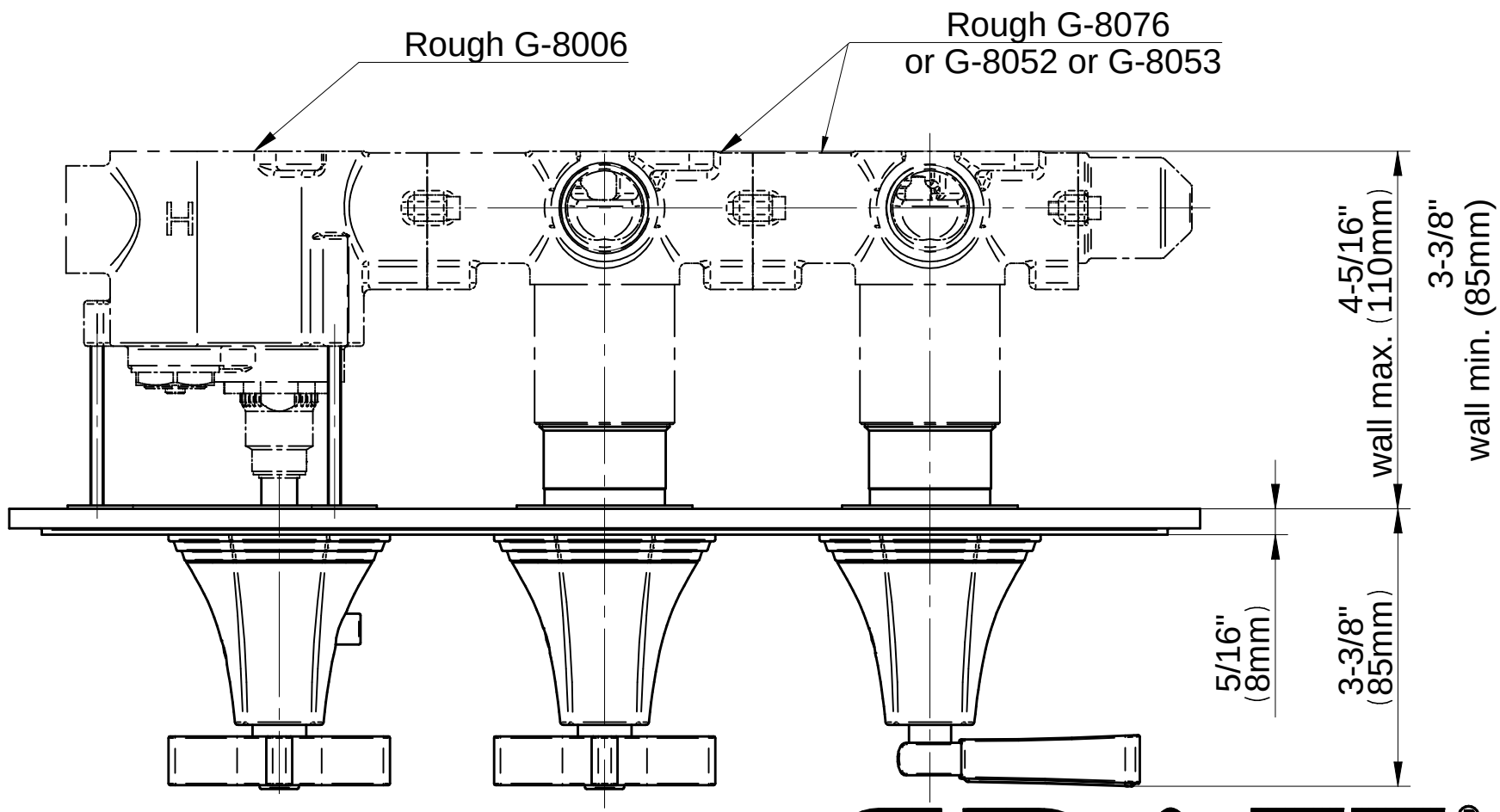

GRAFF®

CUTTING EDGE DESIGN