G-8052

2-way Diverter Valve - Rough - M-Series

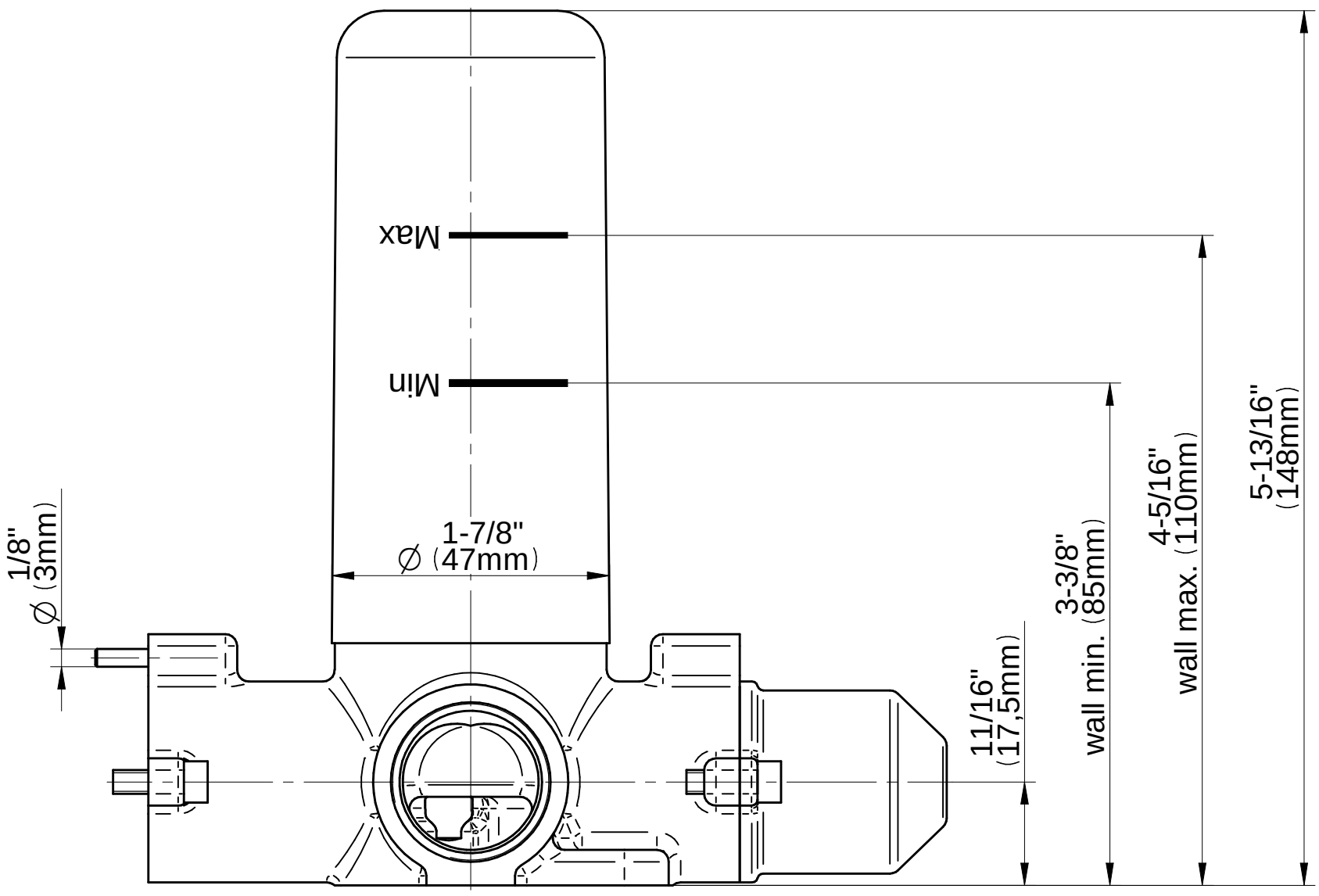

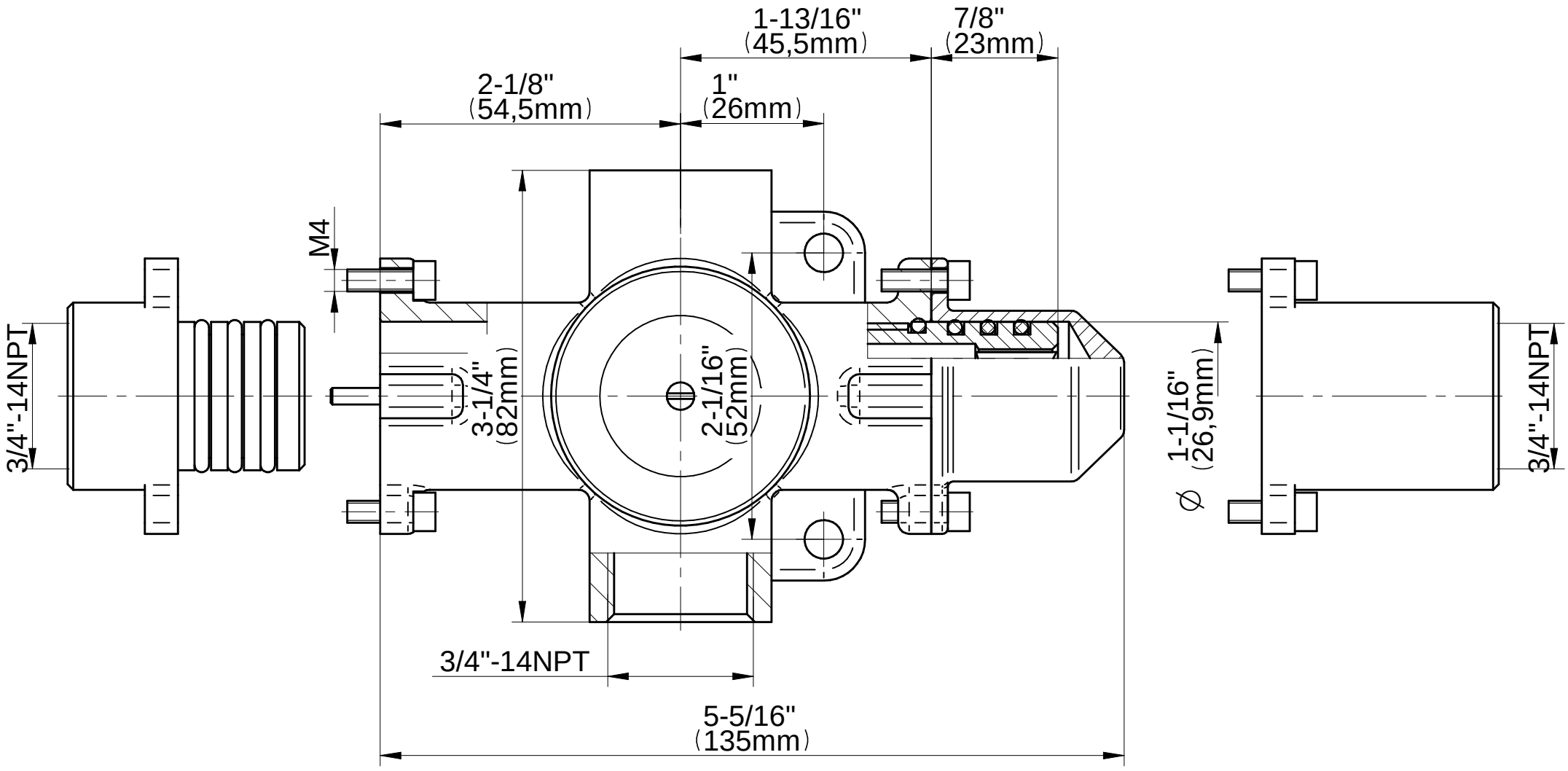

GRAFF®

CUTTING EDGE DESIGN