G-6152-C17B

M.E. Series

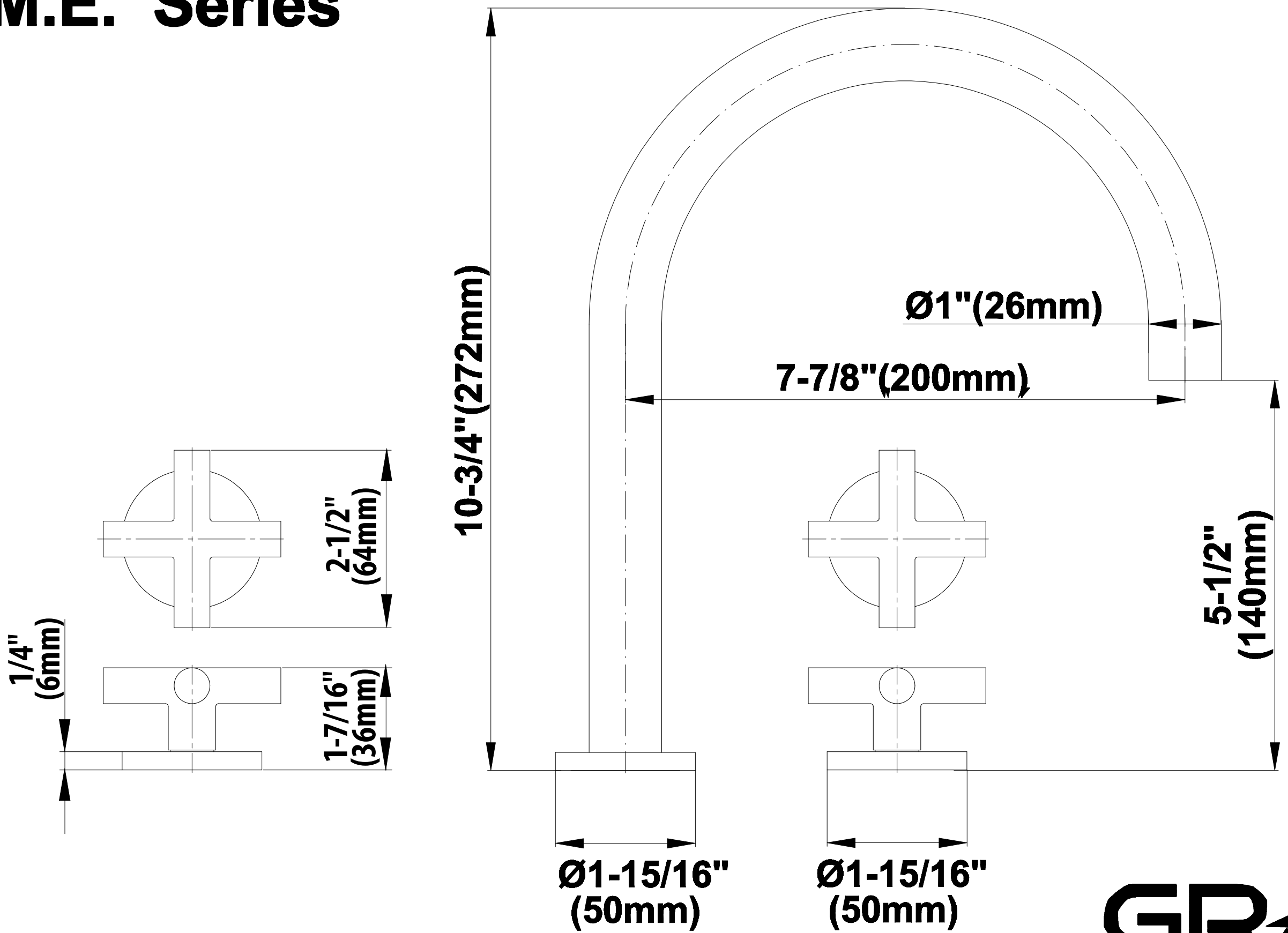

GRAFF®

CUTTING EDGE DESIGN