AMERICH®

LISSE 6632

Skirted

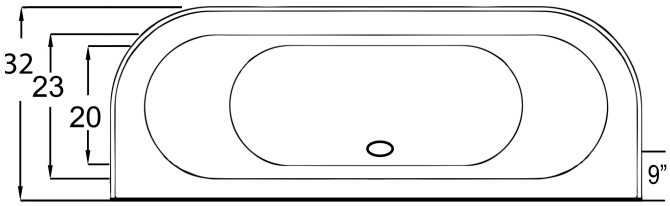

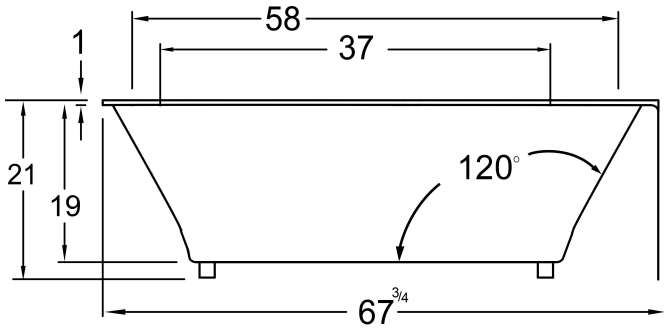

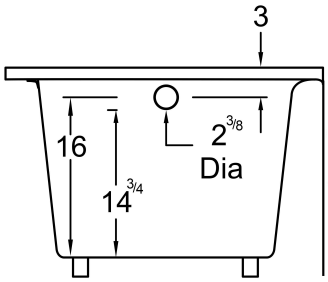

DIMENSIONS

66” x 32” x 21” deep (1676 x 813 x 533 mm)
Whirlpool Operating Gallons = 36 (Liters = 136)
Gallon to Overflow = 62 (Liters = 235)
Weight of Bathtub = 95 lbs (43 kg)

MATERIAL

Acrylic

TUB FLOOR

Textured

UNDERMOUNT: NO

This tub is not designed for undermount installation.

APPROVALS & COMPLIANCE

Americh products meet or exceed the following standards:

- Underwriters Laboratories (UL)
- Underwriters Laboratories - Canada (cUL)
- ANSI Z124.1 • ANSI A112-19.7
- ANSI A112.19.8

Contact Americh for additional approvals.

STANDARD EQUIPMENT

- Adjustable leveling feet

OPTIONAL ACCESSORIES

- Color Upcharge
- Matte White Acrylic Upgrade
- ANEX (Americh Nanobubble Experience)
- Chromatherapy *
- Drop-in Drain Kit
- Grab Bars: 14" * or 16"
- High Density Insulation *
- Pillows: 12" * or Angle
- Serenity Soak (tub only)
- Thermal Comfort System (TCS can not be used with VSM)
- Waste & Overflows Upgrades
  - Cable Drive Waste & Overflow *
  - PVC Waste & Overflow +

★ Made in the USA

All bathtub dimensions are ± 1/2”

Last Update 10/15/24

Always check our website for the most updated specifications: Americh.com