# D49721

## Sch. 40 PVC
## 1-Hole Pull & Drain Waste & Overflow

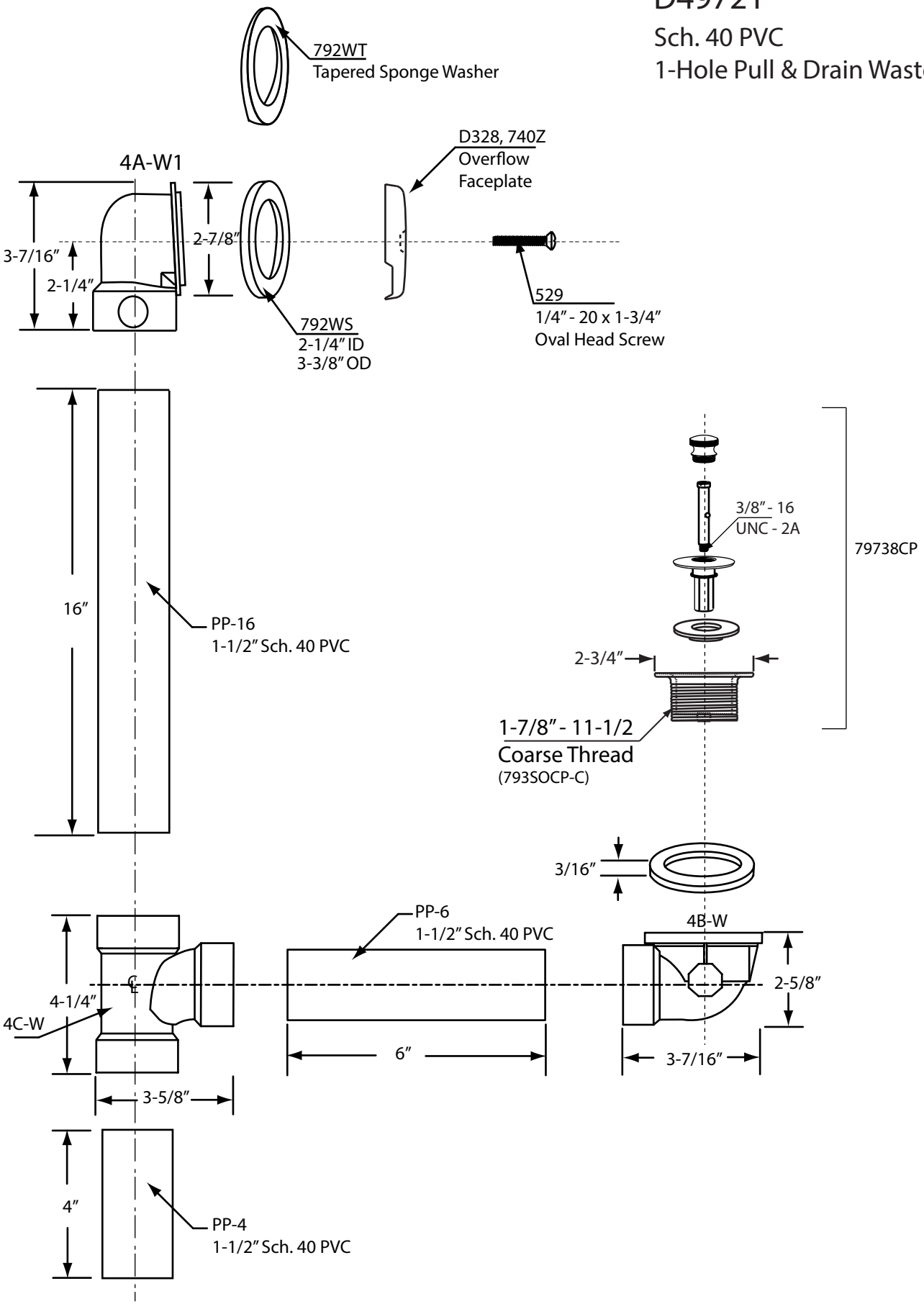


WESTBRASS
Fine Decorative Plumbing Since 1935
2429 East Olympic Blvd. Los Angeles, CA 90021
213-627-8441 • FAX 213-627-2844 • www.westbrass.com