WATERSTONE FAUCETS

Model # 3710-18

CONTEMPORARY GANTRY FAUCET - 18” ARTICULATED SPOUT

- Max Counter Thickness 2-3/8”
- Recommended Install Hole Size 1-3/8"

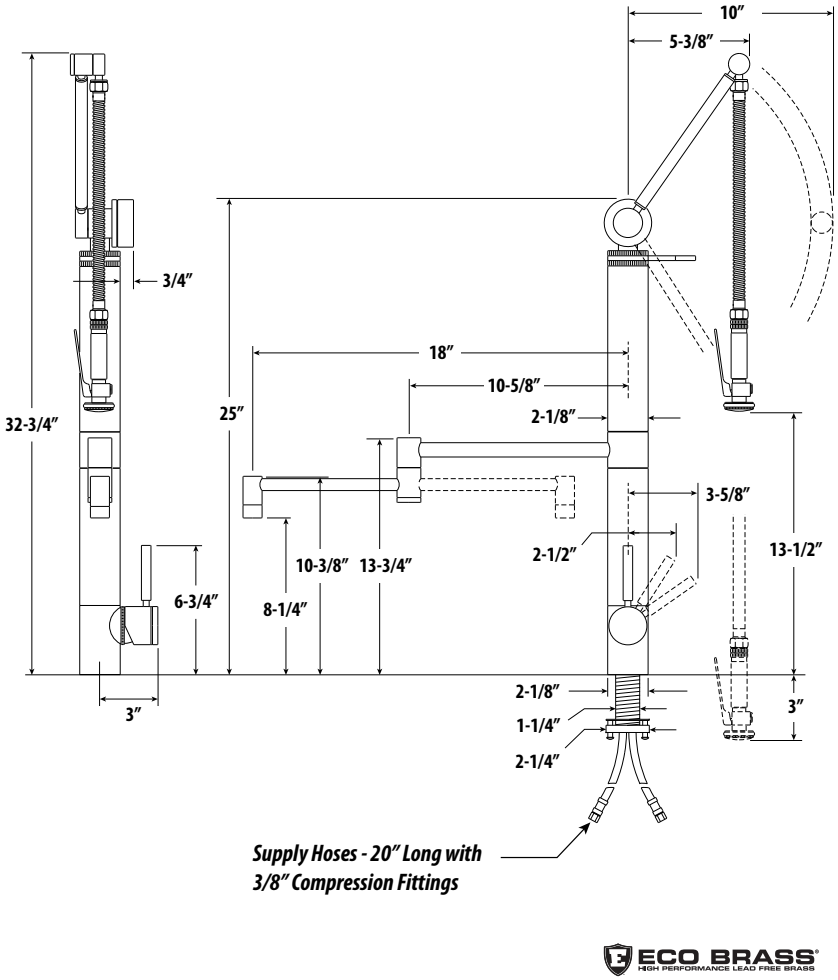

ECO BRASS HIGH PERFORMANCE LEAD FREE BRASS

DIMENSIONS MAY VARY AND ARE SUBJECT TO CHANGE. NO RESPONSIBILITY IS ASSUMED FOR USE OF SUPERCEDED OR VOIDED DATA

Product Description

- Solid Brass or Stainless Steel construction.
- Ceramic disk valve cartridge.
- Removable Hot/Cold indicator ring.
- 1.75 gpm maximum flow rate with aerated tip.
- Lever handle.
- Handle adjusts 45 degrees in either direction for clearance from backsplash.
- Reinforced braided connection hoses.
- Adjustable PTFE “Friction Lock” aids handle feel and prevents sag.
- 18” articulated spout.
- Spout swivels 360 degrees.

Codes/Standards Applicable

Specified model meets or exceeds the following:

- **ASME A112.18.1**
- **CSA B125.1**
- **NSF 61**
- **CALGreen**

Finishes Available

FINISHES AVAILABLE:	*Black - 06*	*Distressed Antique Brass - DAB*	*Polished Copper - PC*	*Tuscan Brass - TB*
Almond - 01	*Black Nickel - BLN*	*Distressed Antique Copper - DAC*	*Polished Gold - PG*	*Venetian Bronze - VB*
Antique Brass - AB	*Black-Oil Rubbed Bronze - ORB*	*Distressed American Bronze - DAMB*	*Polished Nickel - PN*	*Weathered Brass - WB*
Antique Bronze - ABZ	*Biscuit - 07*	*Distressed Antique Pewter - DAP*	*Satin Chrome - SC*	*Weathered Copper - WC*
Antique Copper - AC	*Caribbean Bronze - CB*	*Euro-White - EW*	*Satin Gold - SG*	*White - WT*
American Bronze - AMB	*Chocolate Bronze - CHB*	*Matte Black - MB*	*Satin Nickel - SN*	
Antique Pewter - AP	*Chrome - CH*	*Polished Brass - PB*	*Stainless Steel - SS**	

Contemporary Styles Only

★ MADE IN AMERICA ★

41180 Raintree Court • Murrieta, CA 92562 • 1-888-304-0660 • 951-304-0520 • www.waterstoneco.com

REVISED: 4-6-15