SIGMA
PRECISION CRAFTED

SPECIFICATIONS

Deck Mount Bidet Set

1.000990

Salem Handle

FEATURES:

- All brass construction.
- Hot & Cold valves and integral Vacuum Breaker/Diverter require 1-1/4" (max.) holes.
- Includes pop-up drain assembly with overflow. Longer ball rod available on request. P/N: APS.11.019
- Diverter controls water flow between douche spray & flushing rim.
- 1/4-turn ceramic disc valve cartridges for handles.
- Available in all finishes. Warranty varies according to finish selection.
- Certified to meet and/or exceed the following codes and standards: ASME A112.18.1/CSAB125.1-2012.

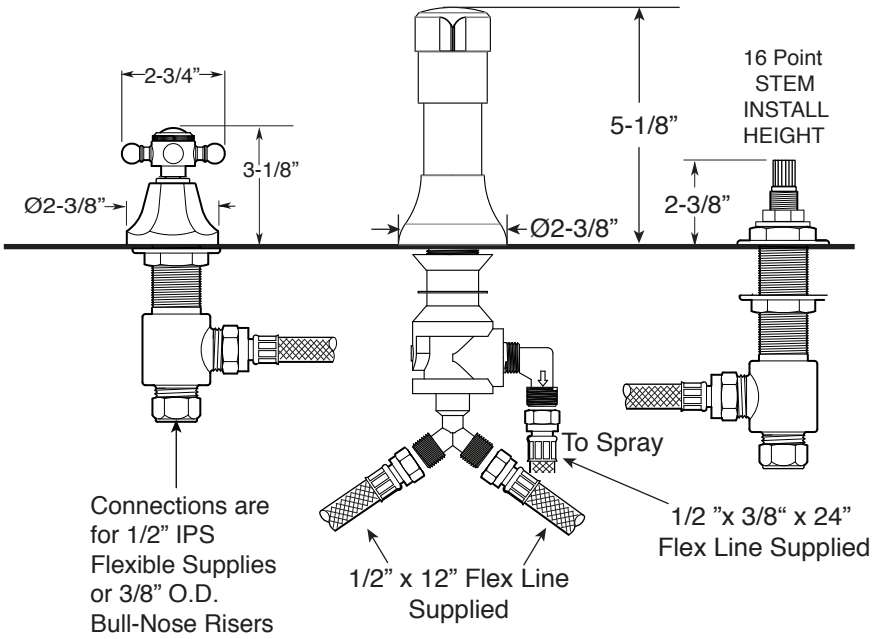

Front View

Side View

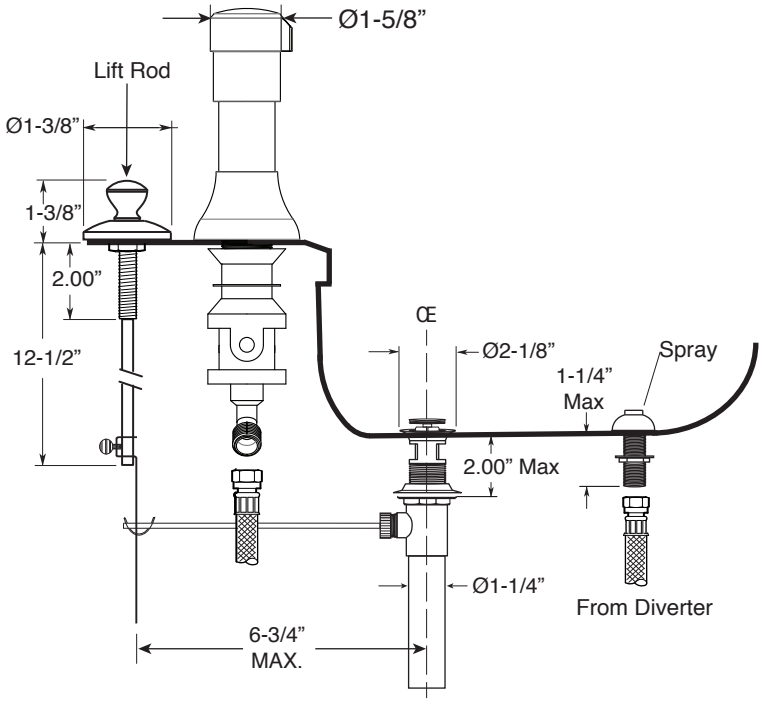

Note: Measurements are subject to change. No responsibility is assumed for use of superseded or voided pages.