NEWPORT BRASS

SEAGER

COLD WATER DISPENSER

3180-5623

Features

- Solid brass construction
- Quarter-turn washerless ceramic disc valve cartridges
- For single hole configurations
- 6.33" (16.1 cm) spout height at outlet
- 4.00" (10.2 cm) spout reach (c-c)
- ADA Compliant
- 1.5 GPM (5.7 LPM) Max - Actual flow rate can vary depending on installation specific factors including in-line water pressure and water filtration system

Codes / Standards Compliance

Meets or exceeds the following at date of manufacture:

- ASME A112.18.1/CSA B125.1
- IAPMO/cUPC
- NSF/ANSI 61, SECTION 9
- NSF/ANSI 372
- IPC
- ADA & ICC/ANSI A117.1
- Energy Policy Act of 1992
- California Energy Commission
- All applicable US Federal and State material regulations

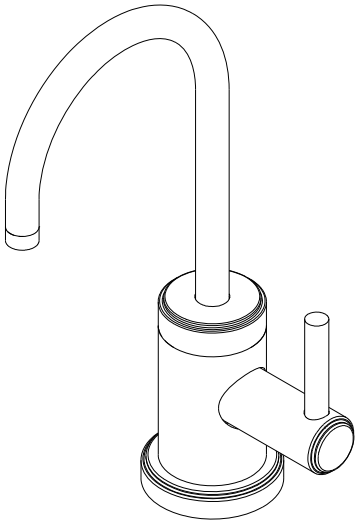

ACCESSORY OPTIONAL	
System Element	Air Gap
Description	Air Gap, Reverse Osmosis
Inlet/Outlet Size	1/4" / 3/8"
Part Number	6-027
Image	

**The use of an air gap is required for dispenser faucets drawing from a reverse osmosis filtration system. The Integrated Air Gap Base (6-027) affords the functionality of a separate air gap within the design of the product as depicted. Failure to specify the Integrated Air Gap Base (6-027) will result in a product constructed using the standard base (no internal air gap)

t: 949.417.5207 | www.newportbrass.com

NEWPORT BRASS

PRODUCT DIMENSIONS *(Units are in inches)*

Product Dimensions are provided for reference only. For specific product installation guidelines, please reference the Installation Instructions of the product being installed.

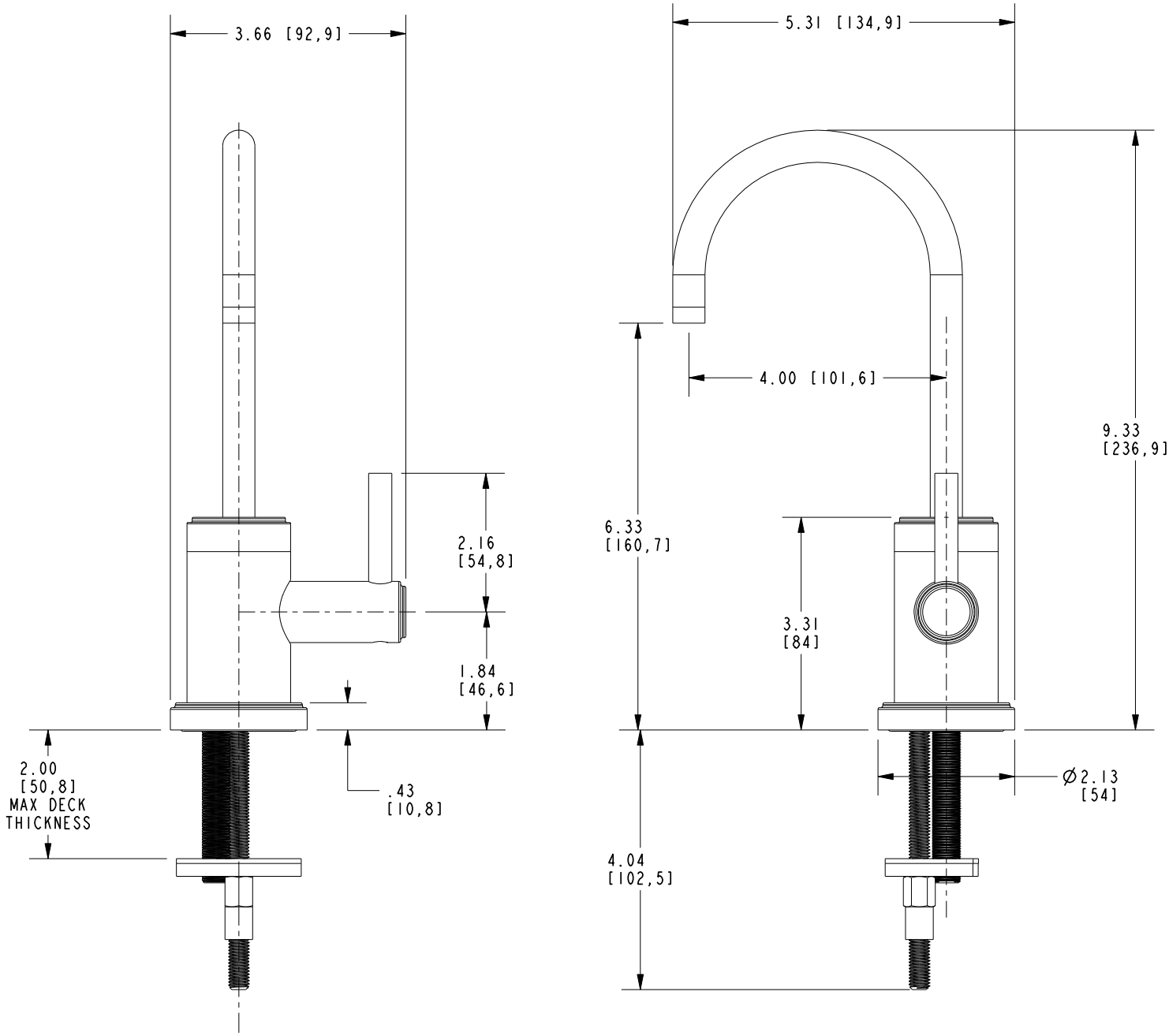

COLD WATER DISPENSER

3180-5623

Newport Brass reserves the right (1) to make changes in specifications and materials, and (2) to change or discontinue models, both without notice or obligation. See current full-line price book or www.newportbrass.com for finish options and product availability.