LATOSCANA
*Exquisite Italian Design*

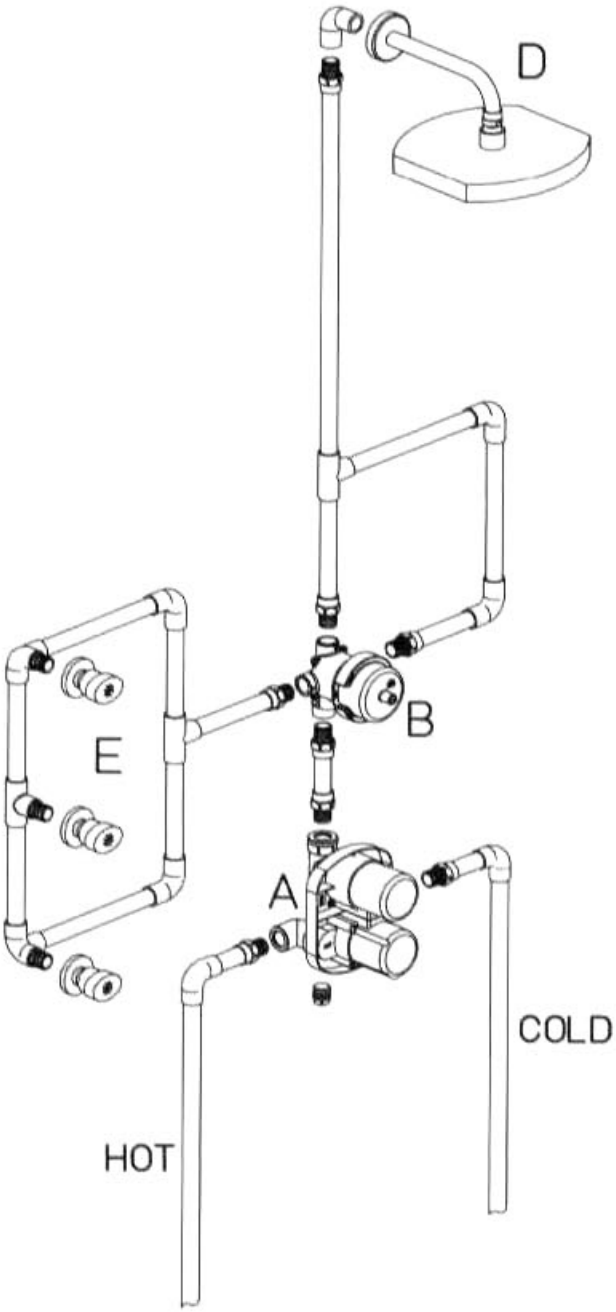


LaToscana *Italian Vessels, Faucets & Vanities*
1571 North Main Road · Newfield, NJ 08344
www.paini-usa.com / 1-866-668-6690