Installation Instructions for KARCHER DESIGN UEPL Style Lever Handles (PAS and PRI)

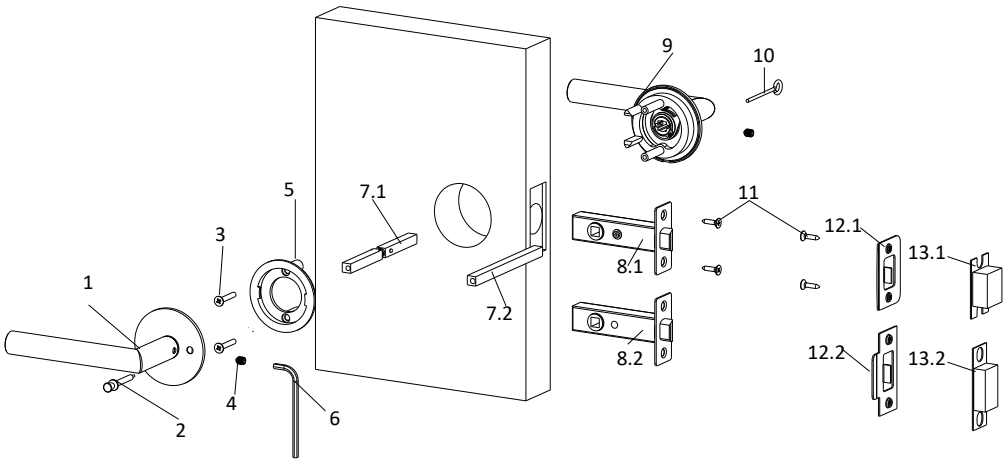

Content

1. Lever handle	2. Privacy Pin (privacy version)	3. Machine screws
4. Set screw	5. Sub rose	6. Allen key
7.1. Split spindle (privacy version)	7.2. Hollow Spindle (passage version)	8.1. Privacy latch (privacy version)
8.2.. Passage latch (passage version)	9. Preassembled lever on rose	10. Emergency release pin (privacy version)
9. Wood screws	12.1. Lip Strike plate	12.2. T strike plate (T strike)
13.1. Dust box for Lip strike plate	13.2. Dust box for T strike plate	14. Face plate

1 Prepare the door

Draw a level 3“ (76mm) center line on both sides of the door. The standard height for a handle set is 36“ (914mm) from the finished floor. Fold the template over the edge of the door, mark site 2 3/8“ (60mm) or 2 3/4“ (70mm) to determine the center-point of holes. Bore a 2 1/8“ (54mm) hole half way through the door on each side to prevent splintering of the door. Drill a 1“ (26mm) hole on lock edge of the door where the center is marked. Cut out a 2 9/32“ x 1“ x 1/8“ (58x26x3mm) base .

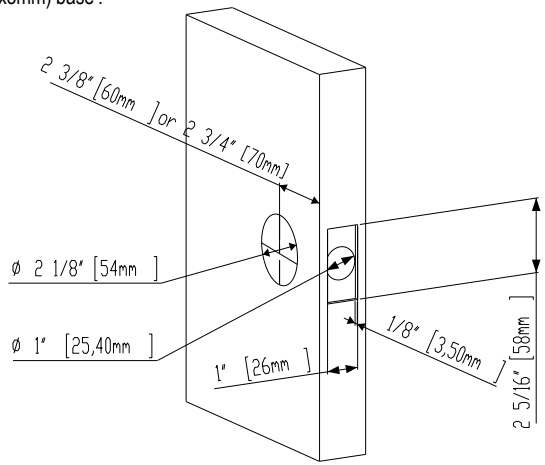

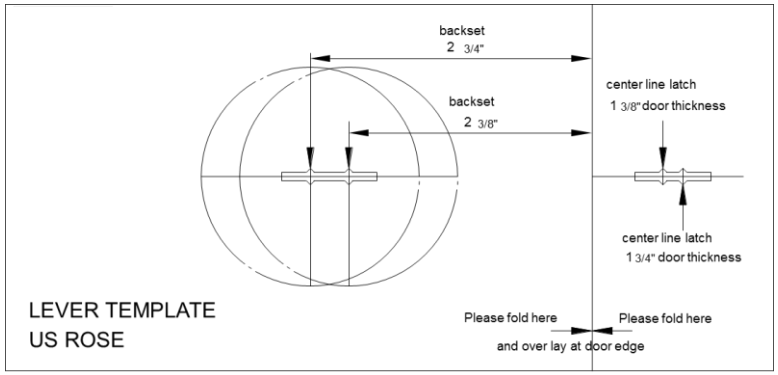

KARCHER DESIGN

KARCHER DESIGN NA
235 W. Paul Ave
Clovis, CA 93612-0250
United States of America

Karcher Design products are designed and measured in metric. The imperial measurements are close approximations to the actual metric dimensions

2 Installing the latch

The tongue of the latch can be rotated 180 degrees to adjust to the handing of the door. Install latch (8.1, 8.2) and face plate (14) using wood screws provided (11).
For privacy: Make sure that the female thread in the latch for the privacy pin is on the lockable side of the door.
Change of direction: Please turn the latch tongue in the desired direction. For 28° latch, please take a look at Number 9

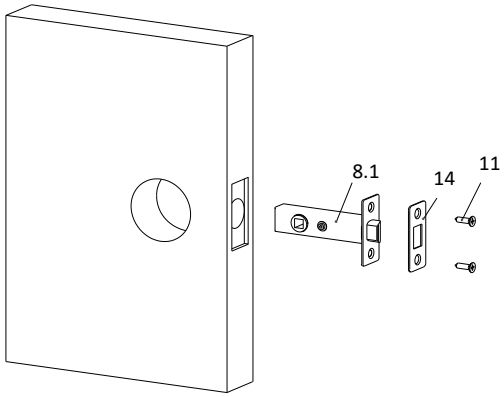

3 Insert the spindle

Insert the spindle (6a, 6b) in a way that the offset hollow center is in a position that the set screw in the lever (4) can pierce the spindle on the thinnest side, typically toward the door edge or bottom. *For passage*: The spindle has to be placed in the center of the door. *For privacy*: The spindle has to be locked in the hub of the privacy latch .

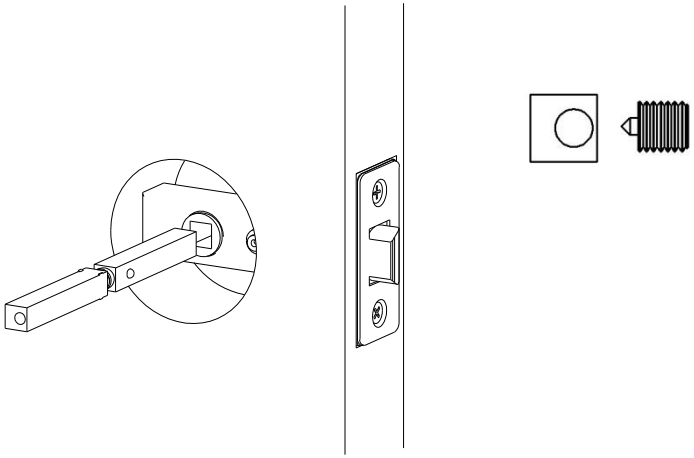

4 Installing the pre-assembled lever

Slide the preassembled lever onto to the spindle (6a, 6b) and push the rose gently on the door in way that the prongs of the rose can hold the latch. Slip the opposite side the sub rose (5) over the posts of the pre-assembled lever sub-rose. Attach the two pieces with the machine screws (3). If passage: Center the spindle and tighten the set screw.

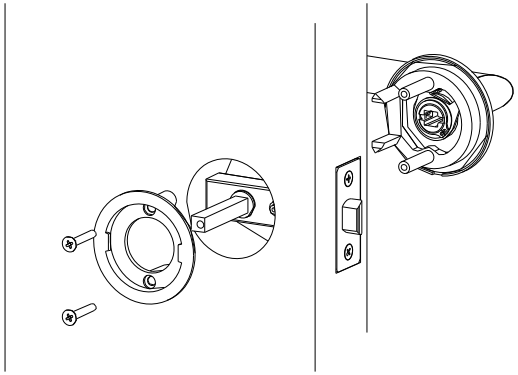

5 Attaching the opposite lever)

Place the lever handle (1) on the spindle and push it gently until the rose touches the sub rose (5).

Turn the rose clockwise and push the lever handle (1) until the rose touches the door. After releasing the rose, it should automatically turn back and snap into the subrose.

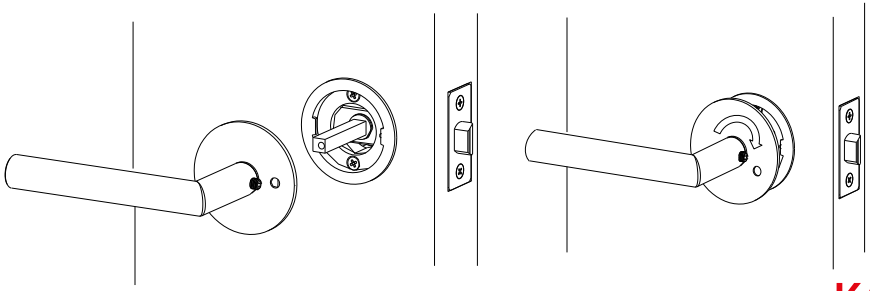

KARCHER DESIGN

KARCHER DESIGN NA
235 W. Paul Ave
Clovis, CA 93612-0250
United States of America

Karcher Design products are designed and measured in metric. The imperial measurements are close approximations to the actual metric dimensions

6 Installing the privacy Pin

Fix the set screw with the allan key, until you feel that the set screw has pierced the spindle.

For privacy Version: Screw the privacy pin after tightening the set screws (4).

TEST THE FUNCTION BEFORE CLOSING THE DOOR

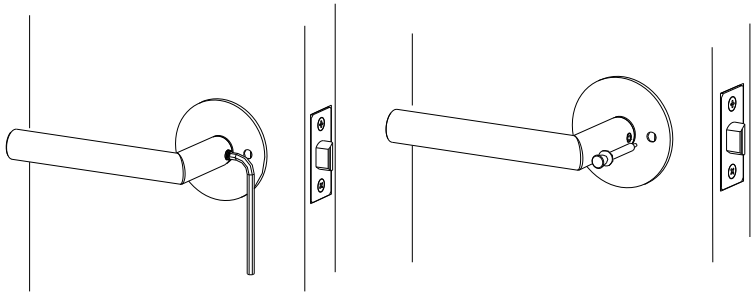

7 Install Strike plate

Determine the door thickness. Mark the position of the latch tongue at the door frame for the location of the strike plate. Draw a horizontal center line. The center of the dust cover has to be determined by measuring half a door thickness from edge of the door leaf. Take the side of the door leaf in the direction where the door opens.

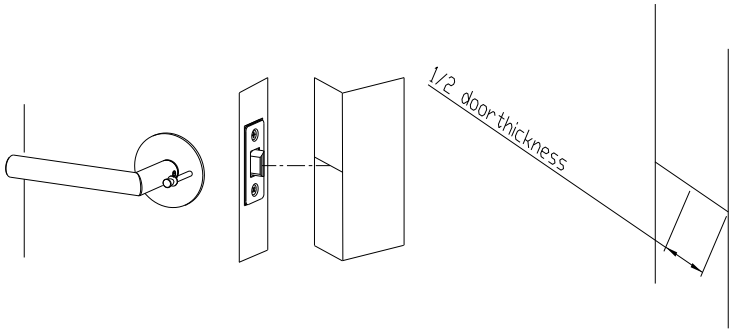

7.A.1: LIP Strike

8.A.1: Cut out a 1 ¼" x 7/8" x 5/8" (32mm x 22 x16 mm) base around the determined center

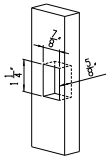

8.A.2: Insert the dust cover into the cut out an put on the lip strike

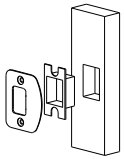

8.A.3:use the lip strike as a template and mark the outer edge with a pencil.

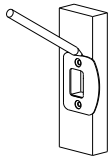

8.A.4: cut the marked area out with a depth of 3/32" that lipstrike is flush

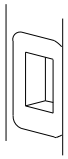

8.A.5: install the Lip strike using the wood screws provided.

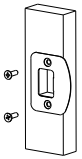

7.A.2: T-Strike

8.B.1: Cut out a 1 3/8" x 13/16" x 5/8" (35mm x 20,5 x 16 mm) base around the determined center.

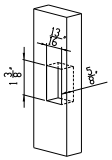

8.A.2: Insert the dust cover into the cut out an put on the T strike

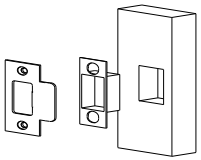

8.A.3:use the T strike as a template and mark the outer edge with a pencil.

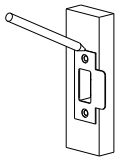

8.A.4: cut the marked area out with a depth of 3/32" that T strike is flush

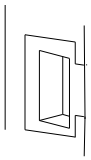

8.A.5: install the T- strike using the wood screws provided.

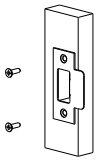

KARCHER DESIGN

KARCHER DESIGN NA
235 W. Paul Ave
Clovis, CA 93612-0250
United States of America

Karcher Design products are designed and measured in metric. The imperial measurements are close approximations to the actual metric dimensions

KARCHER DESIGN

KARCHER DESIGN NA
235 W. Paul Ave
Clovis, CA 93612-0250
United States of America

9.A Change of Latch tongue direction 28° Latch

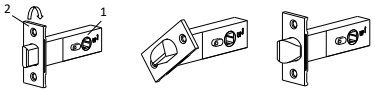

Turn foreend plate by 180°.

9.B Change of Handing 28° Latch (Privacy function)

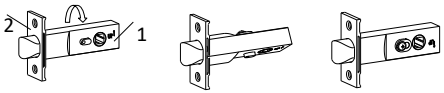

Rotate the latch by 180° aorund it horizontal axis.

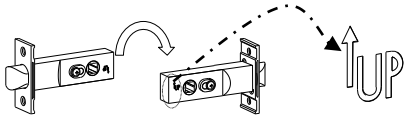

Tilt the latch around the end of the latch by 180° that the arrow is up

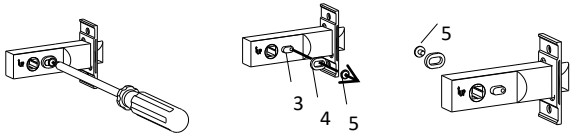

Take the screw and the distance washer out and screw it in on the opposite side. Test the function.

10 Limited Warranty – USA & Canada Only

Karcher GmbH ("Karcher") warrants to the original retail purchaser ("Purchaser"), but to no other person, that Karcher's products ("Products") shall be free from defects in material or workmanship for a period of one (1) year following the purchase of the Products from an authorized dealer. Karcher's sole obligation under this limited warranty shall be, at the option of Karcher, to repair or
replace Products which Karcher determines, in its sole discretion, to be defective and which are returned to Karcher by an authorized dealer within one (1) year from the date of purchase of the Products.

Karcher does not assume any warranty responsibility for damage to the Products due to conditions over which Karcher has no control, including but not limited to ordinary wear and tear,improper installation or maintenance, alteration, impact, accident, misuse, tampering or abuse. Karcher assumes no responsibility for tarnishing, discoloration, excessive wear or deterioration of the surface finishes due to exposure to weather conditions over which Karcher has no control. Karcher assumes no responsibility for any defects or damage caused by the Purchaser or any third parties.

KARCHER MAKES NO OTHER WARRANTIES OF ANY KIND OTHER THAN THOSE CONTAINED HEREIN AND HEREBY DISCLAIMS ALL OTHER WARRANTIES, EXPRESS OR IMPLIED, WITH RESPECT TO THE PRODUCTS INCLUDING WITHOUT LIMITATION ANY WARRANTIES OF MERCHANTABILITY OR FITNESS FOR A PARTICULAR PURPOSE. THIS
LIMITED WARRANTY IS IN LIEU OF ALL OTHER WARRANTIES, EXPRESS OR IMPLIED,AND IS LIMITED TO THE DURATION OF THE LIMITED WARRANTY PERIOD. IN NO EVENT SHALL KARCHER BE LIABLE FOR ANY SPECIAL, DIRECT,INDIRECT, INCIDENTAL, OR CONSEQUENTIAL DAMAGES, INCLUDING, BUT NOT LIMITED TO LOSS OF PROFITS, PROPERTY DAMAGE, DAMAGES TO BUSINESS OR BUSINESS RELATIONS, OR DAMAGES FOR LOSS OF OPERATION. THIS WARRANTY REPRESENTS KARCHER'S SOLE LIABILITY TO THE PURCHASER FOR CLAIMS RELATED TO THE PRODUCTS WHETHER THE CLAIMS ARE BASED UPON CONTRACT, TORT, OR ANY OTHER LEGAL THEORY. Karcher's total cumulative liability under this limited warranty, if any, is limited to the dollar amount of the Purchaser's original payment for the Products.

The invalidity or unenforceability of any provision of this limited warranty shall not affect the validity and enforceability of any remaining provisions, and this limited warranty and disclaimer of liability shall be construed in all respects as if any invalid or unenforceable provision is omitted.

Some states do not allow limitation on how long an implied warranty lasts or the exclusion or limitation of incidental or consequential damages so the above limitations or exclusions may not apply to you, the buyer.

This warranty gives you specific legal rights and may also have other rights which vary from state to state.

Karcher Design NA, LLC
235 W. Paul Ave
Clovis, CA 93612-0250
Office: 425-440-0708