HUNTINGTON BRASS

Pop-up Installation

Pop-up Assembly Component Parts

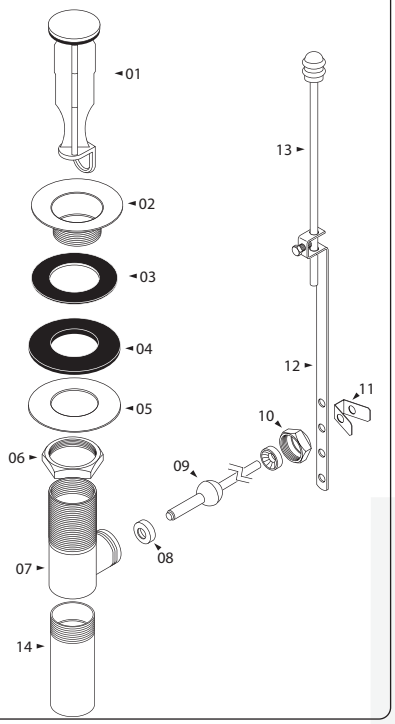

#	PART NAME	QTY
1	PLUNGER	1
2	DRAIN COLLAR UNIT	1
3	TOP RUBBER WASHER	1
4	BOTTOM RUBBER WASHER	1
5	BOTTOM PLASTIC WASHER	1
6	LOCK NUT	1
7	BODY	1
8	BALL JOINT PACKING	2
9	BALL ROD	1
10	CAP NUT	1
11	SPRING CLIP	1
12	HODE ROD STRAP	1
13	LIFT ROD / LIFT KNOB	1
13	TAIL PIECE	1

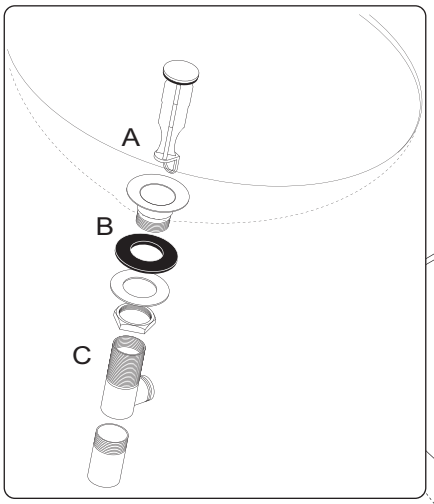

A.Remove pop-up plunger from center of drain assembly.

B.Unscrew drain flange and remove thin rubber gasket.

C.Loosen metal locknut as far as possible. Apply generous bead of silicon caulking to bottom of drain flange and set on drain opening in sink. Do not use plumbers putty or any other oil based sealant. This may void finish warranty. If pop-up comes with a top washer this washer can be used instead of the silicone caulking. Insert drain assembly into drain hole from bottom of sink. Push thick rounded rubber gasket

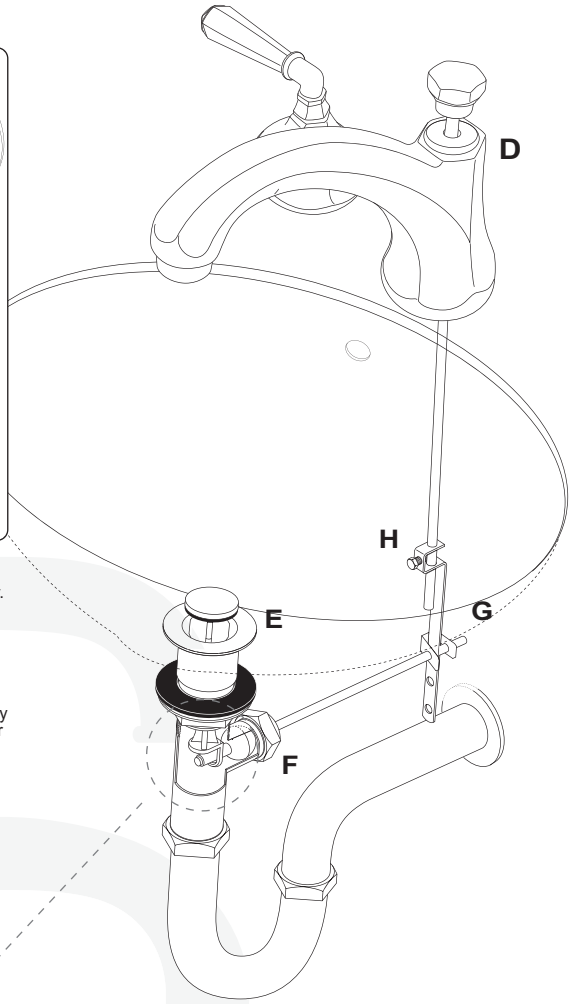

D. Slide lift rod through hole in faucet spout.

E. Insert pop-up plunger into drain. Hole in bottom of pop-up is to the back of the drain. Remove metal lock nut from hole in back of drain assembly. Remove spring clip from pivot rod.

F. Slide locknut over long end of pivot rod and onto ball. Insert short end of pivot rod into opening in rear of drain assembly. Remember to apply tape or compound to threads. Tighten locknutkeeping ball in place. Make sure pivot rod can still move.

G. Slide one end of spring clip onto pivot rod. Slide end of pivot rod through hole in lift rod strap. Slide other end of spring clip onto pivot rod. Pinch spring clip closed.

H. Insert bottom of lift rod into hole at top of lift rod strap. Tighten thumb screw.

I. Connect drain assembly to main drain trap.

Insert stopper in collar and hold with eye-screw hole facing back. If necessary, adjust stopper eye screw height by loosening lock nut and rotating counter-clockwise. Tighten lock nut

Fit cone washer and nut to ball rod.

Insert ball rod into drain body below so short end of ball rod end fits in stopper eye-screw hole **(See Fig A)**. Be sure that the two ball joint plastic washers are on both sides of the ball rod when installing. Screw on ball rod nut(do not over tighten). Ball rod must move up & down freely

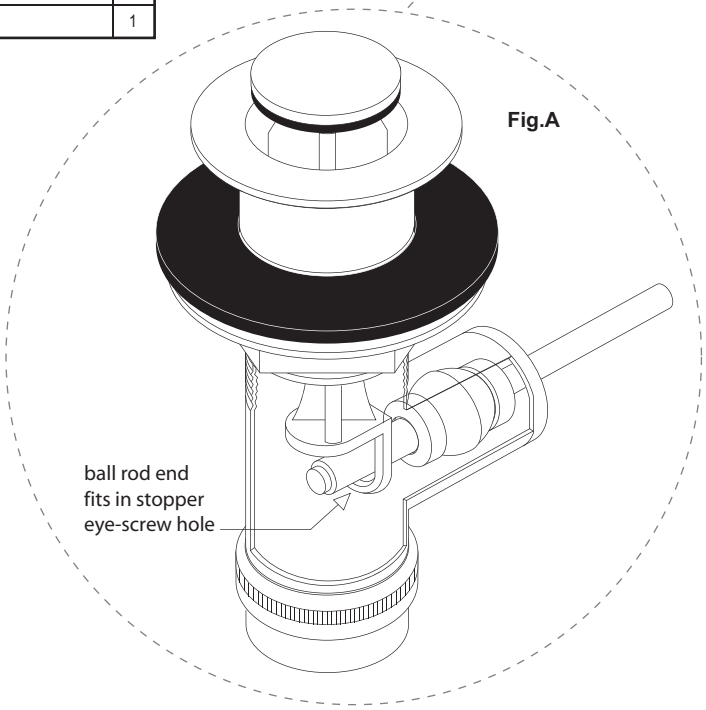

Help Info? Please call Toll-FREE customer service line at 1-800-888-6604 for additional assistance service.

Requiere asistencia? Favor de llamar a nuestro servicio a clientes sin costo al 1-800-888-6604 para asistencia adicional o servicio.