CHAMELEON - Roman Tub Filler
CHRMxxCP / NK / GN / GD

Description

- 3pc Roman Tub faucet
- Ceram nstruction
- 3/4" S.S. braided hose
- 18 GPM @ 80 PSI

Standards

- ASME A112.18.1 Compliant
- Listed IAPMO / UPC & CUPC
- ADA Accessibility Guidelines for Buildings and Facilities - 4.27.4 Controls and Mechanisms (lever handle only)
- NSF - 61-9 tested and approved
- CSA B125.1 Compliant and listed

Colors / FinishES

01 - Chrome
12 - Satin Nickel
20 - Antique Bronze
21 - Antique Brass
22 - Antique nickel
23 - Antique Copper
24 - Satin Copper
27 - Matte Nickel
28 - ORB
29 - Polished Nickel
70 - Polished Brass (PVD)
71 - Polished Nickel (PVD)
72 - Satin Nickel (PVD)
73 - Satin Brass (PVD)

Please add finish code when placing order for parts with using following finish code table. For example J handle in Chrome will be BJ-01, BJ-12 for Satin Nickel.

Special Handle Option
N/A (* see escutcheon options)

BREAK DOWN
Component Parts List

#	PART NAME	QTY
1	HANDLE TIP	2
2	ESCUTCHEON	2
3	FLANGE	2
4	RUBBER RING	2
5a	CARTRIDGE (COLD)	1
5b	CARTRIDGE (HOT)	1
6	WASHER	2
7	LOCK NUT	2
8	VALVE BODY	1
9	SPOUT	1
10	AERATOR	1
11	SHANK	1
12	RUBBER RING	1
13	WASHER	1
14	LOCK NUT	1
15	T-CONNECTOR	1
16	HOSE	2

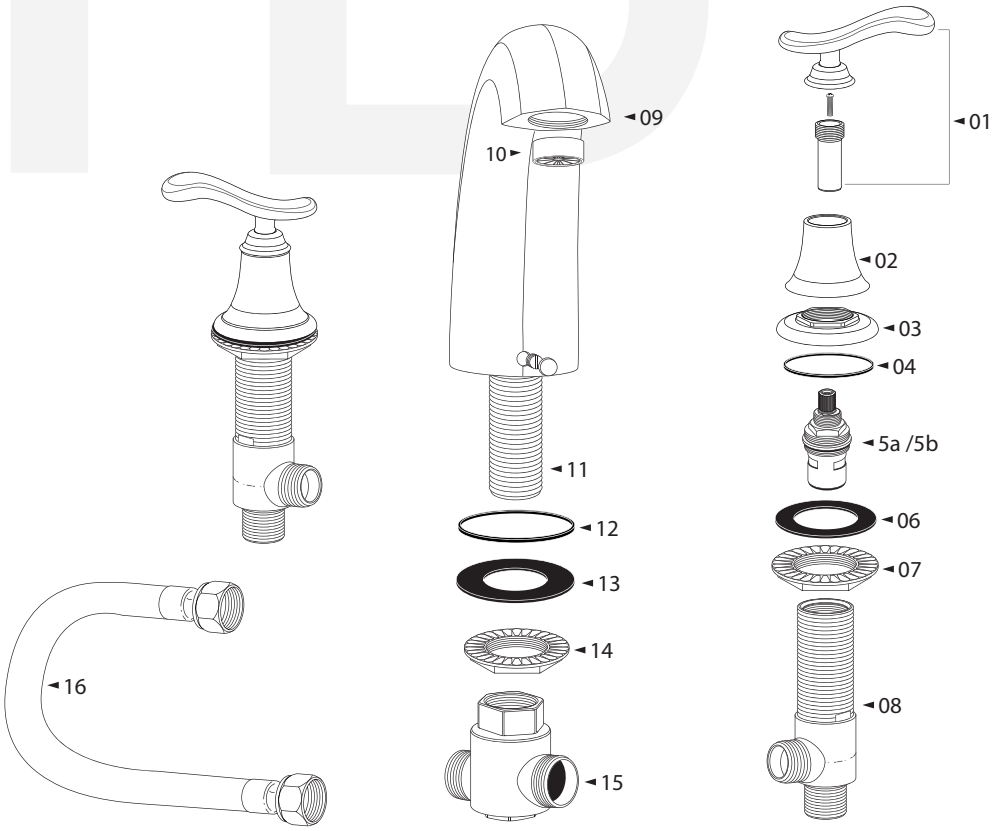

SPECIFICATIONS

Special Escutcheon Option
Chrome / Sain Nickel / Green Ceramic / Gold Ceramic

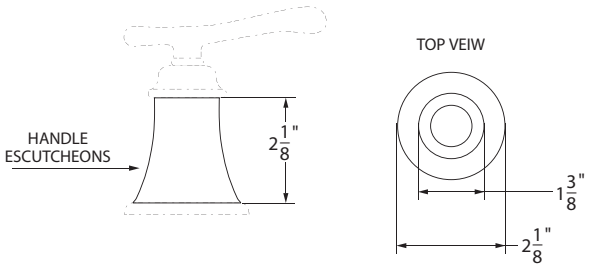

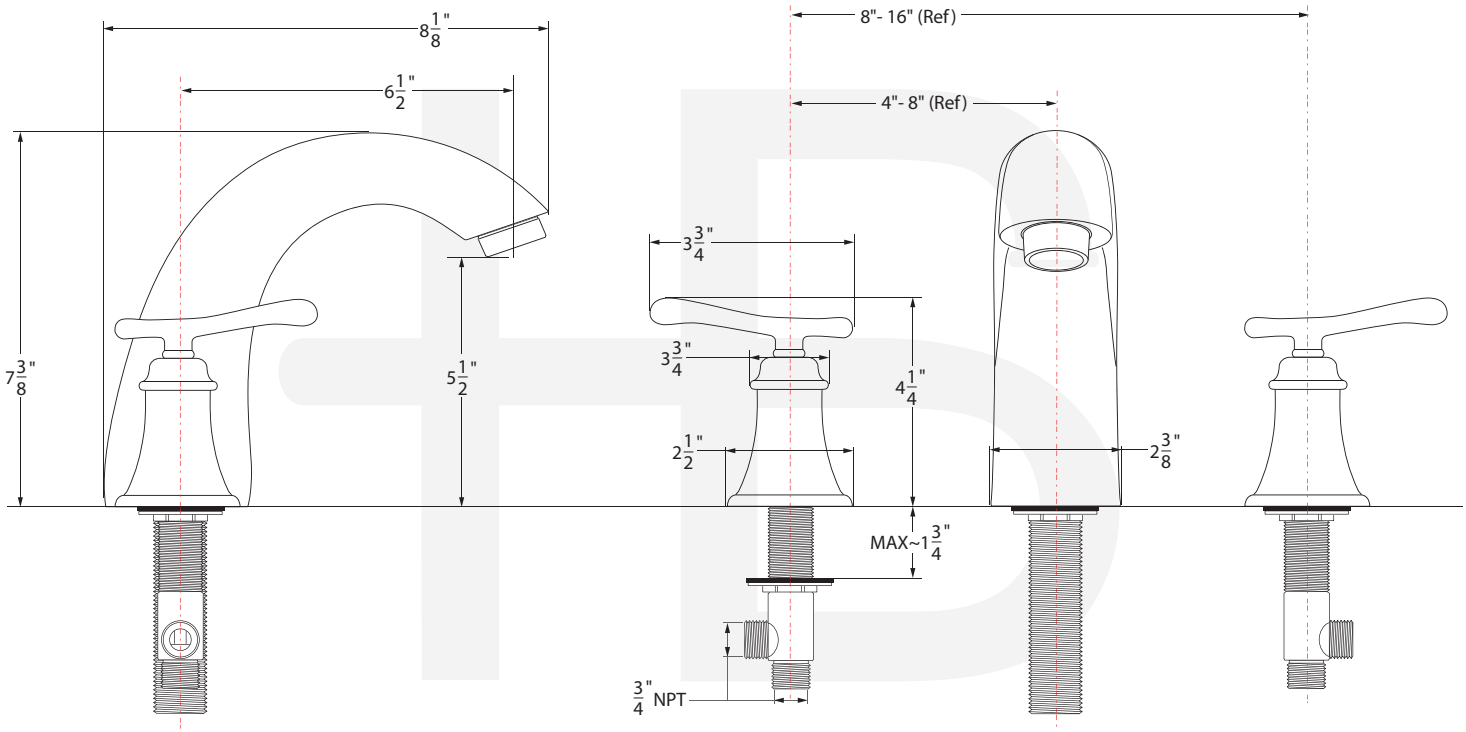

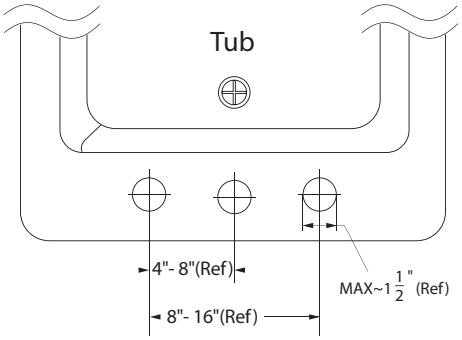

Item Number	Type	Date
CHRM	Roman Tub	07/29/2005