Huntington Brass Installation Instructions for:
P0123199 Tub and Shower Valve

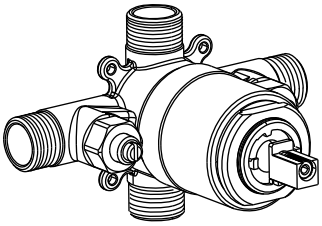

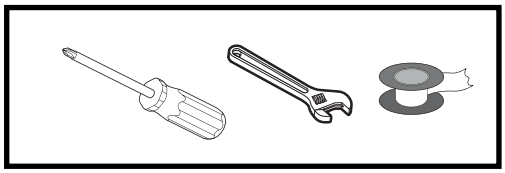

1.

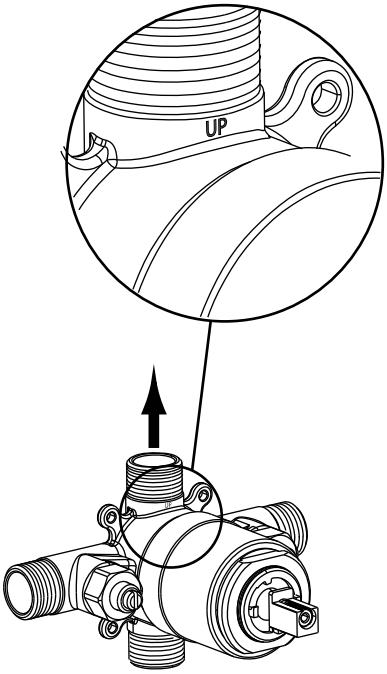

2.

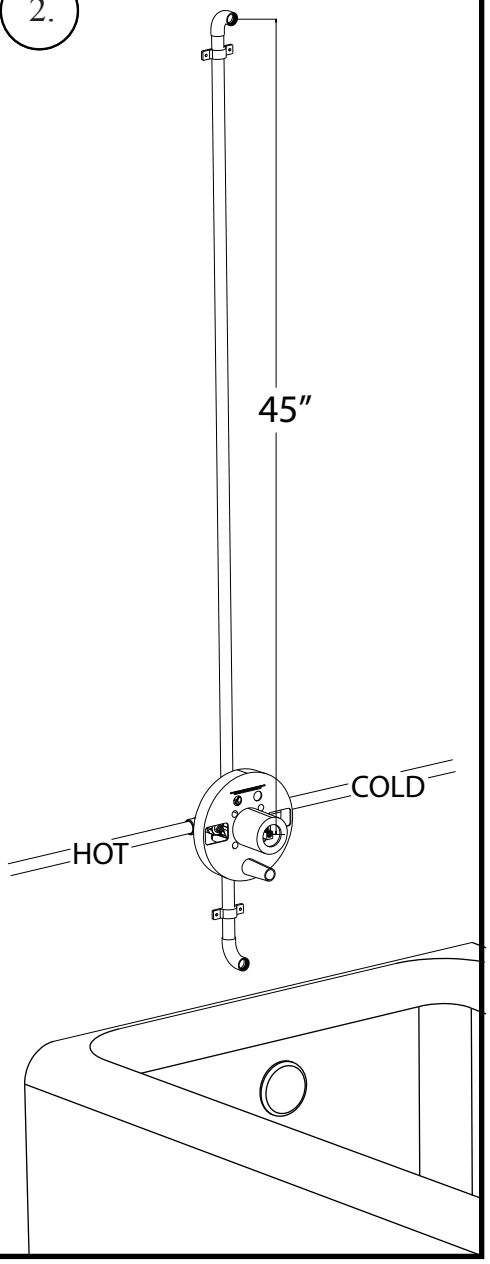

3.

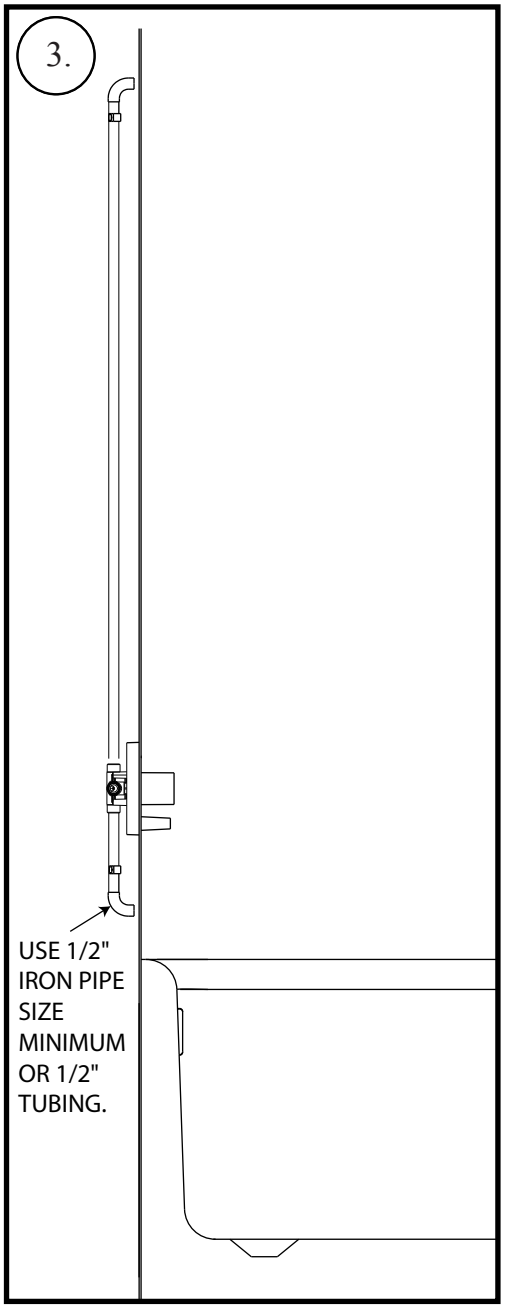
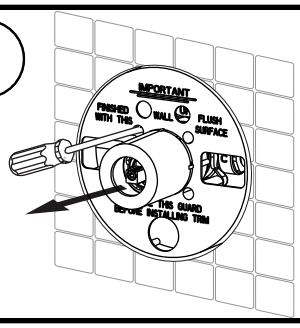
4.