HUNTINGTON BRASS

SPECIFICATION / BREAK DOWN

Mirage Bath Accessories
MRBAPH

Description

• "Mirage" toilet paper holder

Colors / Finishes

C - Chrome
NK - Satin Nickel

FRONT

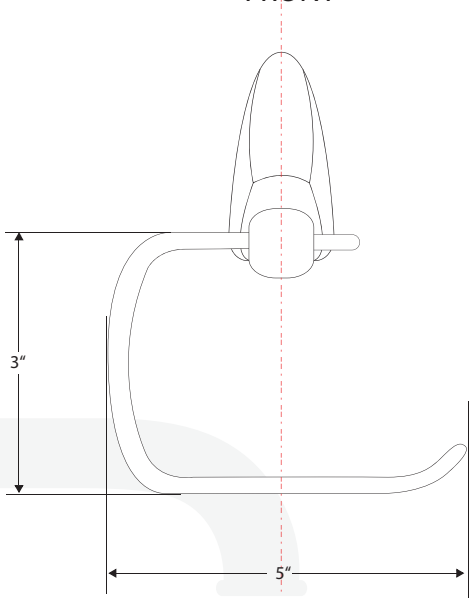

SIDE

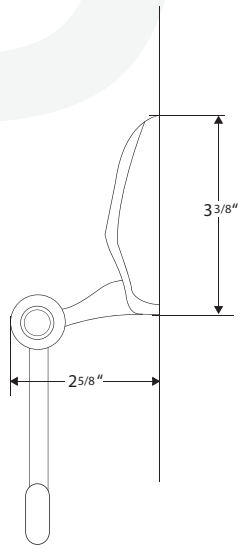

BREAK DOWN
Component Parts List

#	PART NAME	QTY
1	TOILET PAPER HOLDER	1
2	BASE	1
3	BRACKET	1
4	SCREWS	2
5	SCREW HOLDERS	2

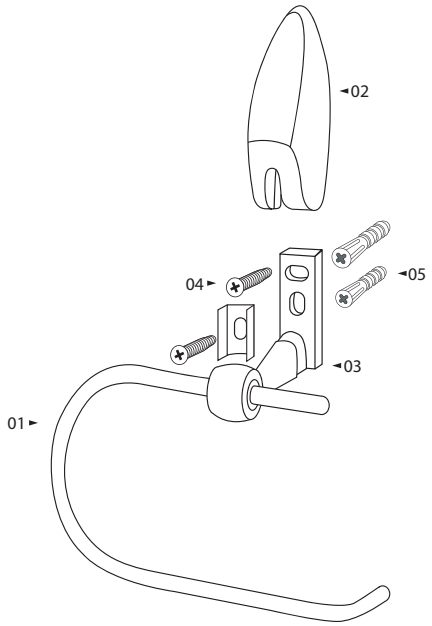

To install:
1. Locate the desired location for the paper holder to hang.
2. Mark the backet hanging points.
3. Drill 2 holes in position for the wall plugs to hang the bracket.
4. Insert the wall plugs and secure the bracket with the screws.
5. Slide cover onto the bracket.