LXBAxxTR

Description
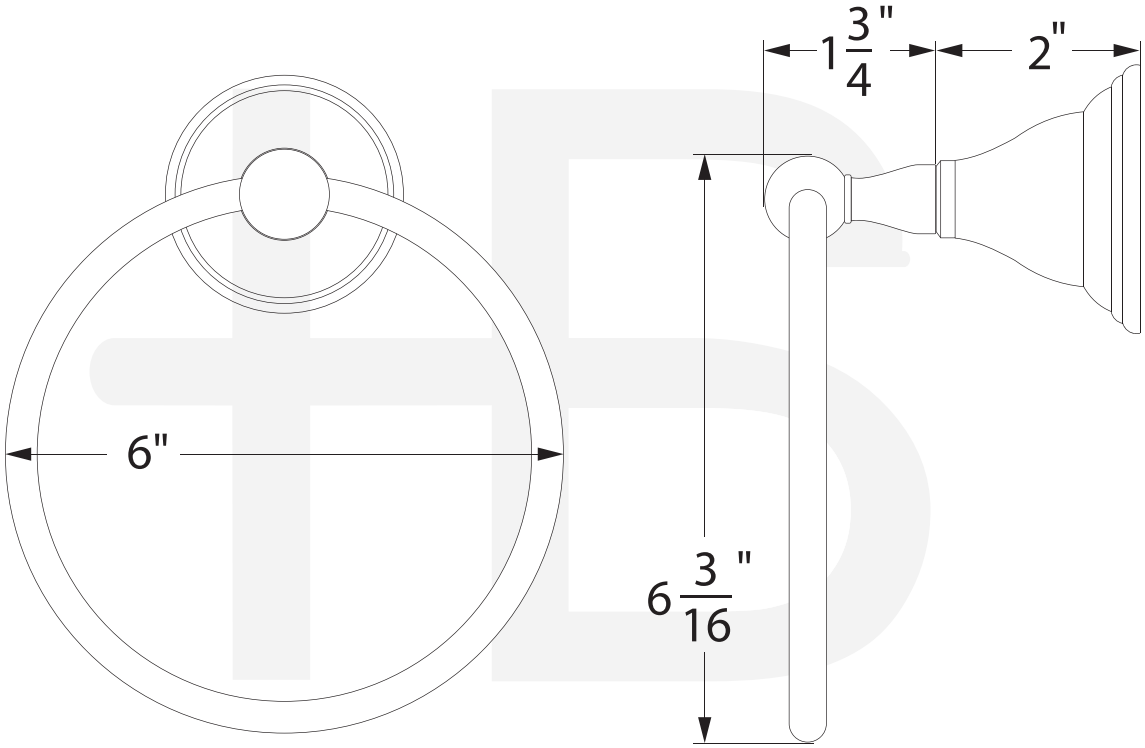
- Towel Ring
- Easy to install bracket assembly
- Available in Huntington Brass special finishes