LXBAxxPH

Description
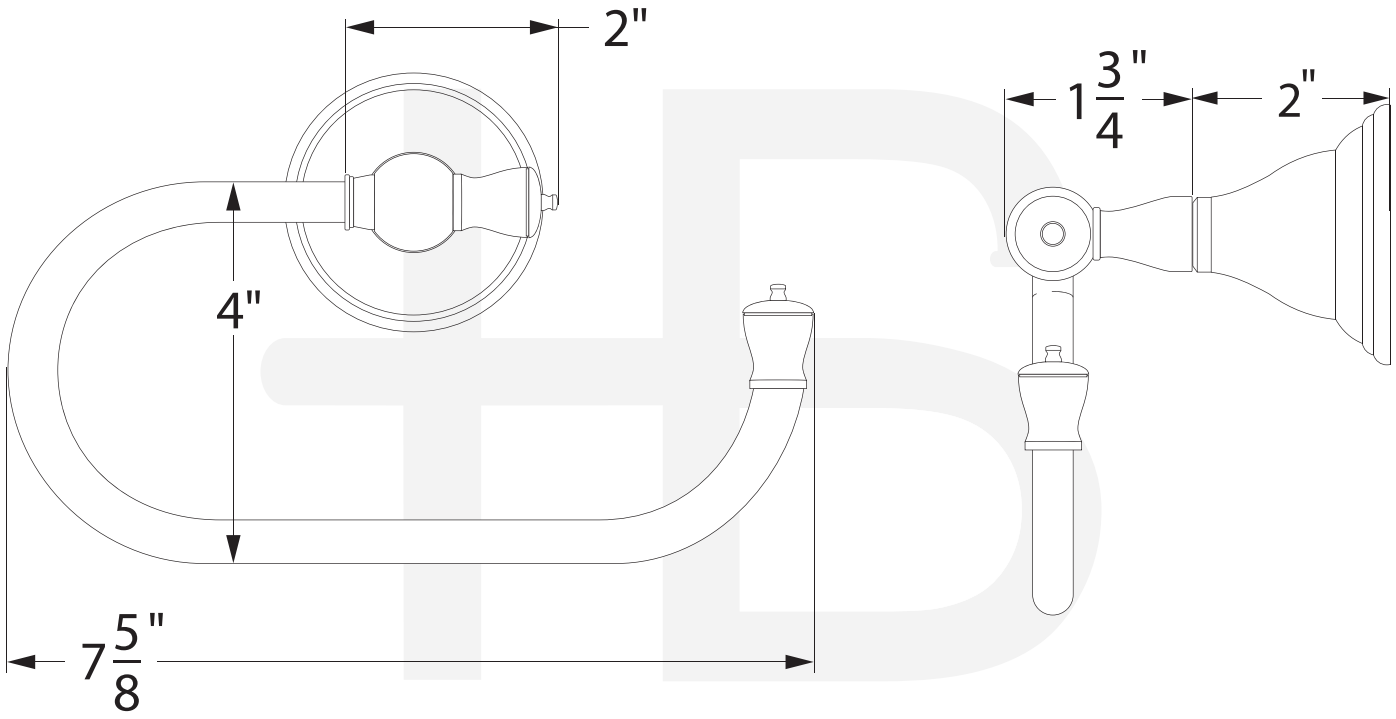
- Paper Holder
- Easy to install bracket assembly
- Available in Huntington Brass special finishes