5pc Roman Tub Filler
HB9932P / HB9934P / HB9935P

Description

- 8" - 16" Roman Tub Filler
- Solid brass spout
- ceramic disc cartridges
- Quick connect spout installation
- NPS connections
- 10 GPM

Standards

- ASME A112.18.1 Compliant
- Listed IAPMO / UPC & CUPC
- ADA Accessibility Guidelines for Buildings and Facilities - 4.27.4 Controls and Mechanisms

Colors / Finishes

C - Chrome
NK- Satin Nickel

BREAK DOWN
Component Parts List

#	PART NAME	QTY
1	HANDLE	3
2	CARTRIDGE LOCK CAP	2
3	FLANGE / RUBBER RING	2
4	CARTRIDGE	2
5	METAL WASHER	2
6	LOCK NUT	2
7	VALVE	2
8	BODY / SPOUT / WATER WAY	1
9	SPOUT FLANGE	1
10	METAL WASHER	1
11	LOCK NUT	1
12	HOSE	2
13	TRANSFER VALVE SET	1
14	HAND SHOWER SET	1
15	ADAPTOR	1
16	HAND SHOWER	1

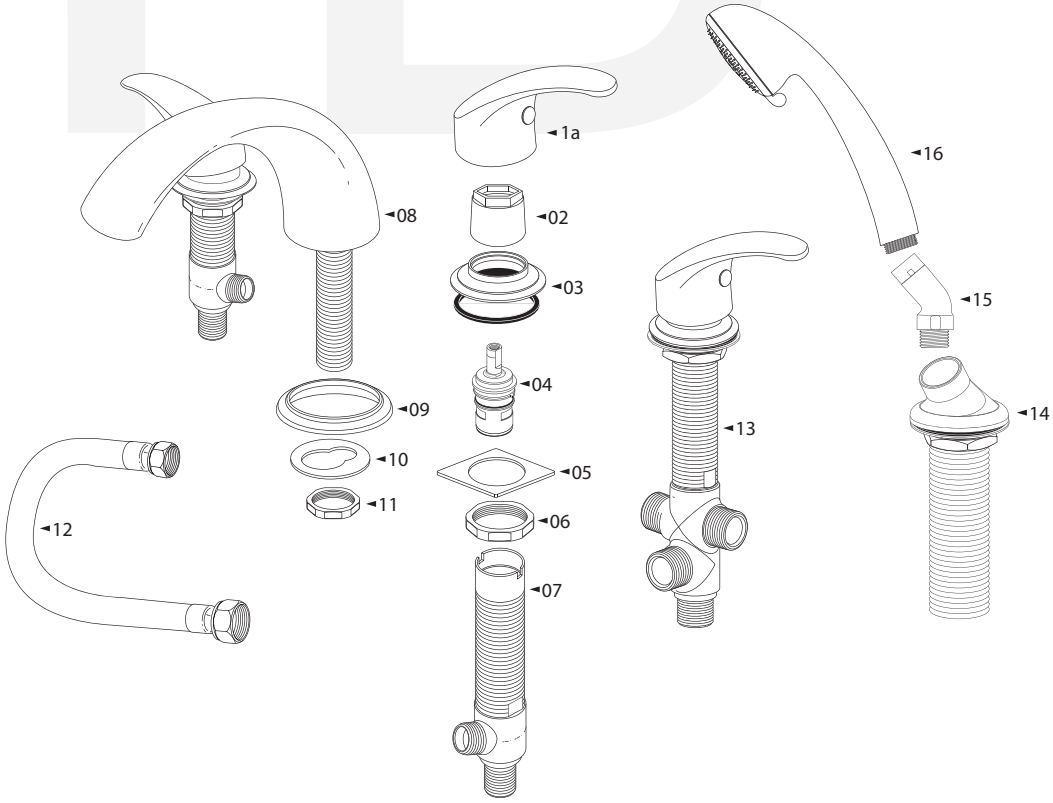

SPECIFIED MODEL

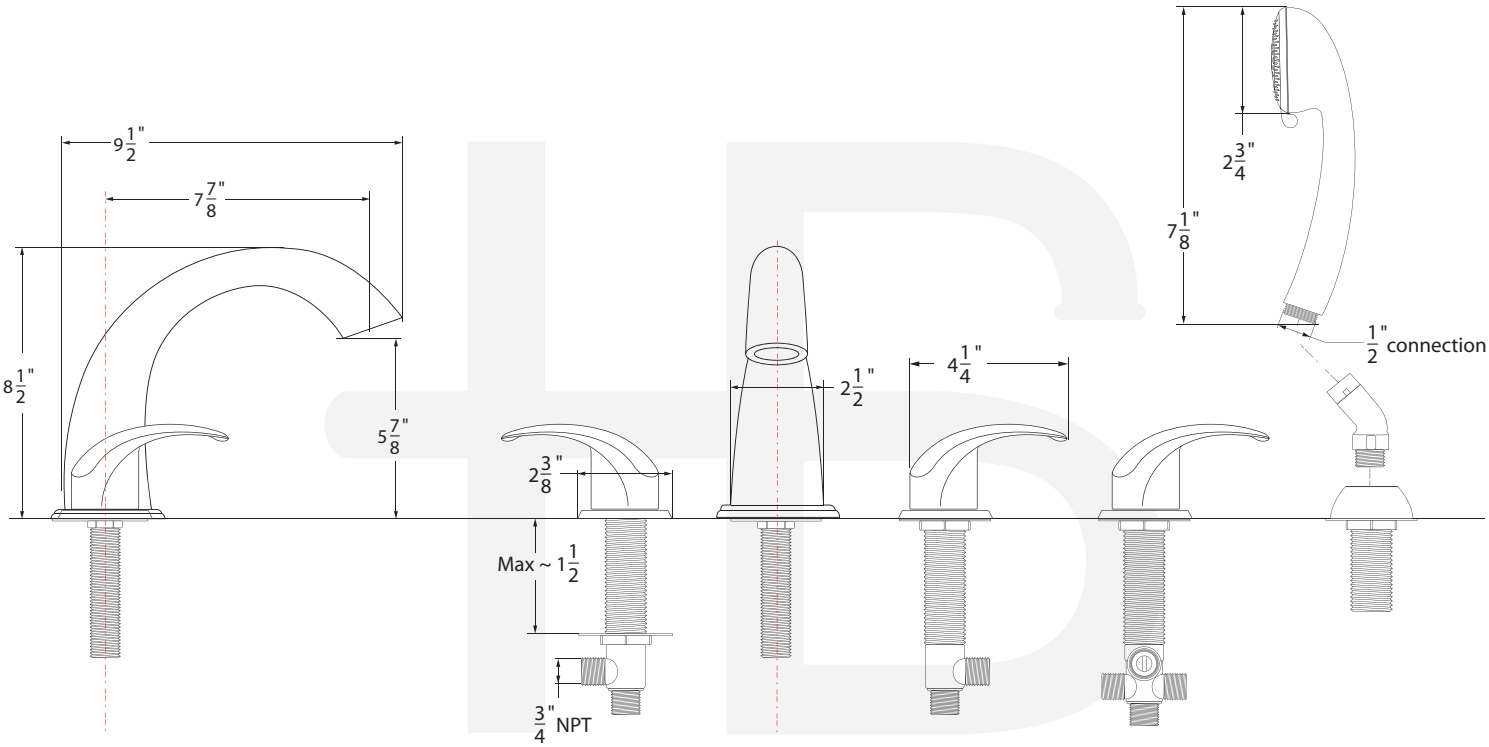

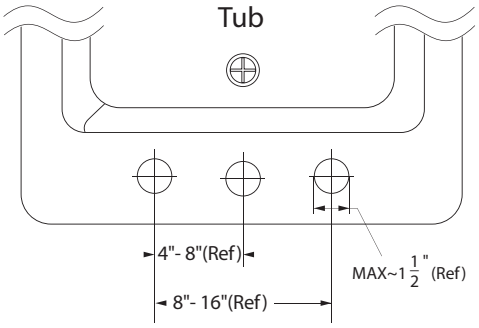

Item Number	Type	Date
HB9932P / HB9934P / HB9935P	5 pc Roman Tub	01/29/2006