Pop-up Assembly Installations

1. Slide lift rod through hole in the spout of the faucet.

2. Remove the flange from the top of the pop-up drain assembly. Loosen the lock nut on the body of the drain assembly and push up through the drain hole in the sink. Use silicone caulking and place a generous amount on the bottom of the drain flange and screw back onto the drain assembly body sticking up through the drain hole (some pop-ups may include a thin rubber washer that can be used in place of the silicone caulking) From underneath pull the drain assembly down and tighten the lock nut from the bottom with a wrench until tight. Make sure that the collar washer is snug in the drain hole from the bottom such that it will not leak water. Make sure that when tightening the lock nut that the plunger rod connection hole is face directly backwards.

3. Making sure that the plunger rod connection is facing back, remove metal lock nut from the hole in back of drain assembly. Then Remove spring clip from the plunger rod. Slide the cone seal and the locknut over long end of plunger rod until touching the ball joint. Next, Insert stopper into the drain collar and hold with eye-screw hole facing back. Insert short end of pivot rod into opening in rear of drain assembly (make sure the inner cone seal is installed and the rod goes through the eyelet in the stopper) Remember to apply tape or compound to threads. Tighten lock nut keeping ball in place. Make sure pivot rod can still move. Test the stopper function by moving the plunger rod up and down.

4. Next, Slide one end of spring clip onto pivot rod. Then slide end of pivot rod through hole in lift rod strap. Slide other end of spring clip onto pivot rod. Pinch spring clip to tighten.

5. Insert bottom of lift rod into hole at top of lift rod strap. Tighten thumb screw.

6. Connect the tail piece to the bottom outlet of the pop-up drain assembly if not done so already. Next, Connect the Tail piece to the top connection in the drain trap.

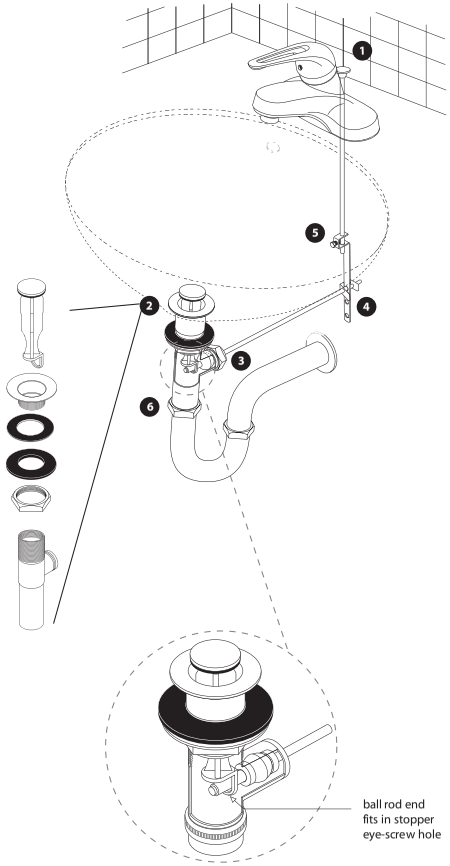

HUNTINGTON BRASS

- HB9324 - Loop handle with brass pop-up
- HB9324H - Loop handle with 50/50 pop-up

- HB9124 - Lever handle with brass pop-up
- HB9124H - Lever handle with 50/50 pop-up

Professional 4" Center Set

Before Your Installation

- Read all instructions carefully.
- Assemble all tools.
- Turn off main water supply before removing old faucet and fixtures.
- Clean surface before installing new faucet.
- Insert a cloth or stopper into drain to prevent small parts from getting lost.
- HB recommends that when cleaning you HB faucet to only use soap and warm water. The use of any chemical substance will void finish warranty.

Tips for Successful Installations

- Use joint compound or Teflon® tape on all threaded connections to prevent leaks.
- Use a soft cloth to protect the faucet's finish when using a wrench, pliers or other tools that could scratch the faucet.
- Tighten all hose connections by hand. Do not over tighten.
- Before turning main water supply back on, open several faucets around the house to prevent pressure from building up. Remove aerator from faucet before turning on water. Flush drain for several minutes before replacing aerator. DO NOT use joint compound or Teflon® tape to reconnect aerator.
- DO NOT use "plumbers putty" or any oil based sealant. HB recommends silicon caulking to be use to seal drain flange and other parts.
- If you experience problems with the installation consult a professional plumber.

11100 Dana Circle Cypress, CA 90630 Tel : 800-888-6604 | Fax : 888-455-5007 www.huntingtonbrass.com

HUNTINGTON BRASS

Help Info? Please call Toll-FREE customer service line at 1-800-888-6604 for additional assistance service.

Installations Measurement

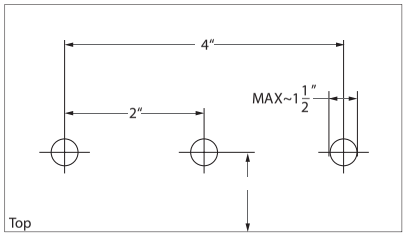

The Tools You May Need

Faucet Installations:

First before starting remove any existing faucet and thoroughly clean the counter surface underneath.

1) Install the mounting bolts into the faucet body. The mounting bolts will install into the two small threaded holes on both ends on the under side of the body by screwing them in clockwise until tight.

2)Making sure that the copper pipes do not get kinked or bent set the faucet down into the 4" spread hole on the sink putting the copper supply and mounting bolt into the same hole.

3) From underneath the sink, slide Mounting washers on to the screws and around the copper tube. You might need to slightly move or bend the copper lines. (Caution: Do not over bend these, they are very fragile. If they are bend too much they will pinch, and this will cause the faucet to leak or not function properly)

4) Next, screw the lock nuts on the mounting bolts. Position faucet on sink properly, and tighten the lock nuts using a small adjustable wrench. (Caution: Do not overtighten nuts damage may occur)

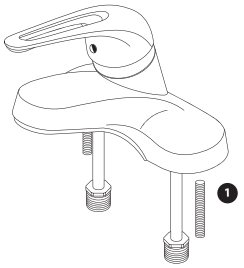

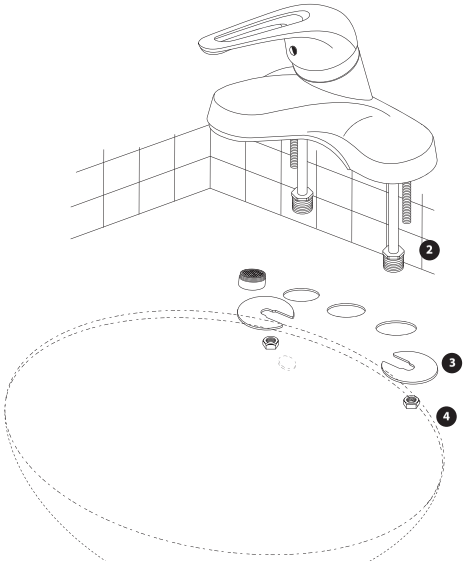

Hose Connections:

Connect hot and cold water supplies. To connect the water supply hoses you can either use the coupling nuts and cone washers provided with the existing 3/8" supply lines or you can use 1/2" flex hose the can be bought at any plumbing supply. First place the coupling nut over the supply line and next slide the cone wash on. Aligning the washer with the bottom inlet of each supply connect the coupling nut. Hand tighten the coupling nut plus and additional 1/2 turn with a wrench. (Note: Supply hoses are not included since most home have existing supply line)

Flush system:
To flush the system first remove the aerator and turn on the water. Let the water run for 2 - 3 min. Check for leaks in all major connection areas. Turn off the water and replace the aerator.

Maintenance:

The handles of this faucet should already be assembled and installed. You will not have to adjust or install these parts. However, in the event that the valve needs to be maintenance i.e. rubber seats and springs need to be changed the handle can be removed and/or installed as shown in the diagram to the left. Any further information regarding care and maintenance of this Huntington Brass product can be found on our web site
www.huntingtonbrass.com

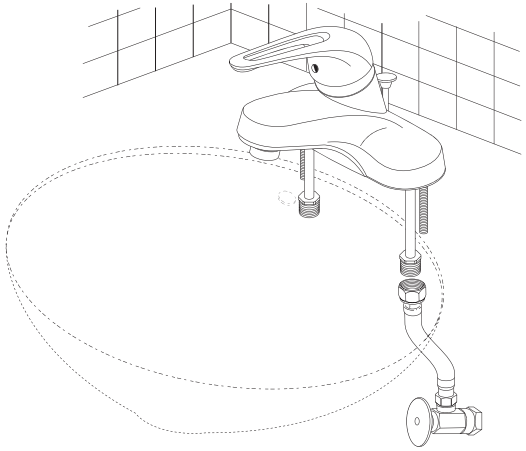

HB9324/ HB9324H - Loop Handle

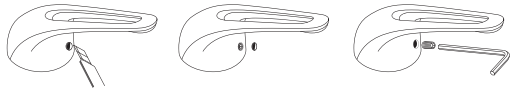
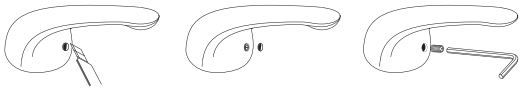
HB9124/ HB9124H - Lever Handle