Two Handle 4” Lavatory Faucet
HB6313 / HB6313J

Description

- 4“ center lavatory faucet
- Brass spout / brass valve body
- 90° turn ceramic disc cartridges
- 1/2” NPS connections
- 2.0 GPM ASME complaint

• HB6313J

Standards

- ASME A112.18.1 Compliant
- Listed IAPMO / UPC
- ADA Accessibility Guidelines for Buildings and Facilities - 4.27.4 Controls and Mechanisms
- NSF - 61-9 tested and approved
- CSA B125.1 Compliant and listed

• HB6313

Colors / Finishes

C - Chrome
NK - Satin Nickel
20 - Antique Bronze
22 - Antique Nickel

Special Handle Option
Citidel / Jenova

BREAK DOWN
Component Parts List

#	PART NAME	QTY
1a	LEVER HANDLE (HB6313)	2
1b	LEVER J HANDLE (HB6313J)	2
2	CARTRIDGE RETAINING NUT	2
3	CARTRIDGE	2
4	POP-UP ROD	1
5	BRASS SPOUT	1
6	DECK PLATE	1
7	AERATOR ASSEMBLY	1
8	BOTTOM PLATE	1
9	HEX NUTS	2
10	POP-UP ASSEMBLY	1

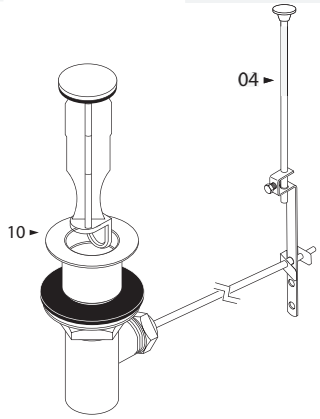

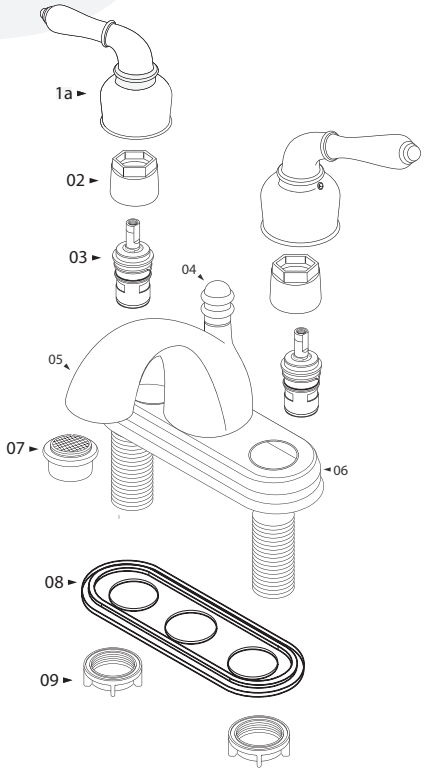

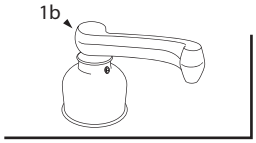

SPECIFIED MODEL - Handle Options

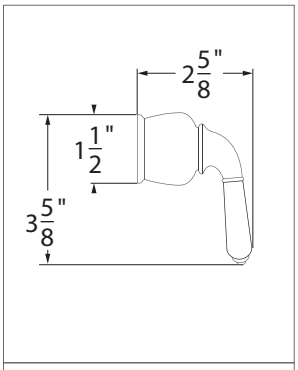

"C" Handle

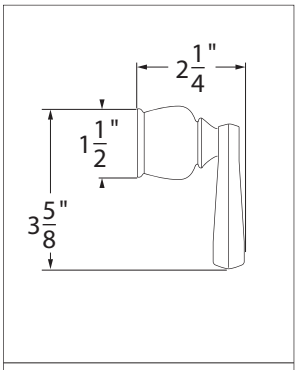

"J" Handle

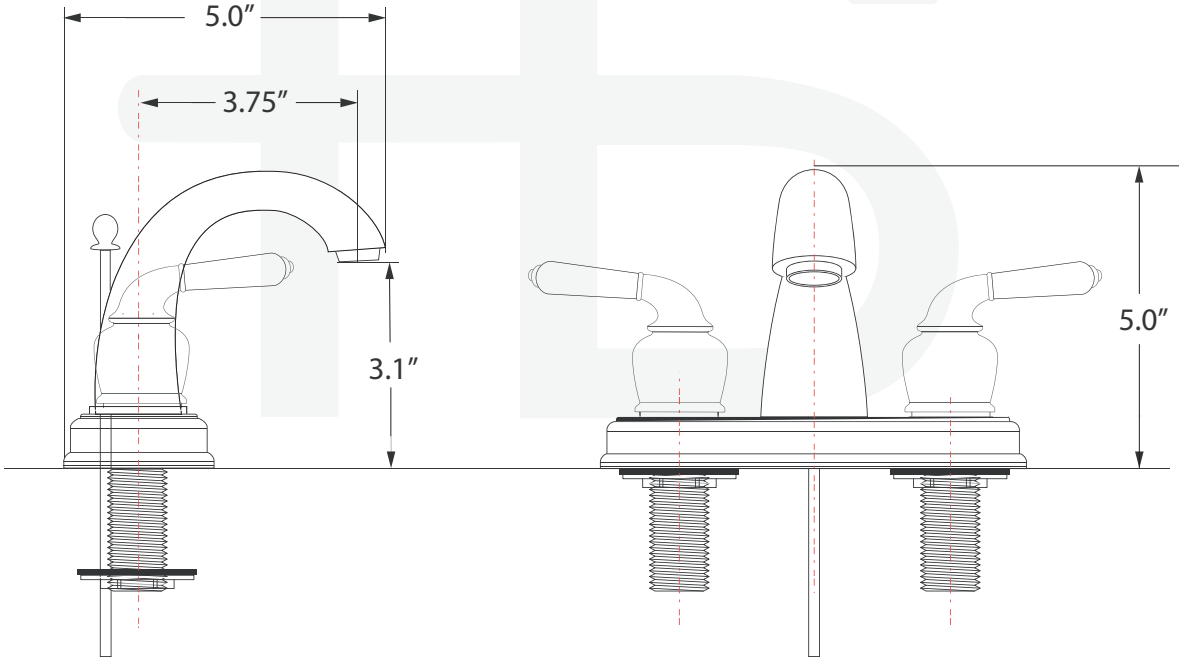

4" Center set installation

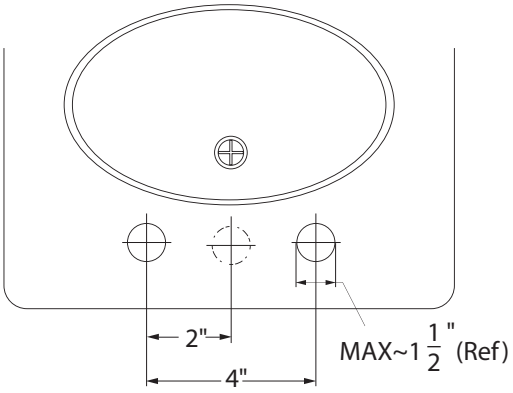

Item Number	Type	Date
HB6313 / HB63103J	Two Handle Lavatory	07/29/2009