Afeel Corp. dba Huntington Brass
11100 Dana Circle
Cypress, Ca 90630
Tel : 1-800-888-6604
Fax : 1-888-455-5007

Visit our web site at:
www.huntingtonbrass.com

Installation instructions for GT2710-xx and GT2715-xx

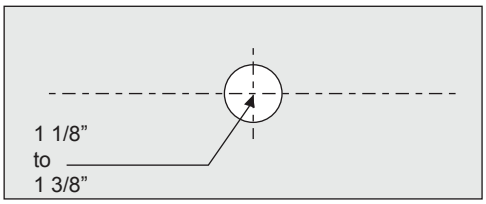

Countertop

1. Cut moulting holes to install the faucet.

Notes Verify the dimensions against the actual faucet.

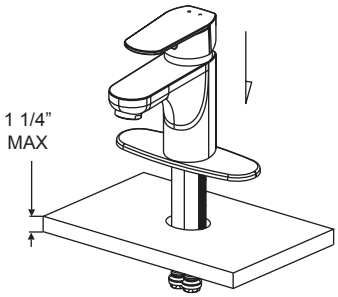

2. Install spout onto the countertop. Put the mounting bracket onto the theaded rods of the spout and then use the lock nuts to tighten until the spout does not move.

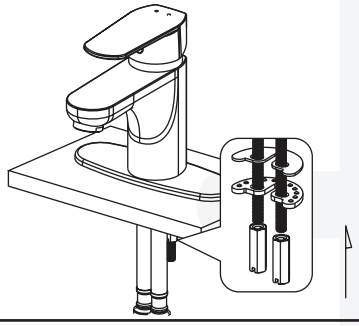

3. Put the mounting bracket onto the theaded rods.
then use the lock nuts to tighten the faucet
untill it does not move.

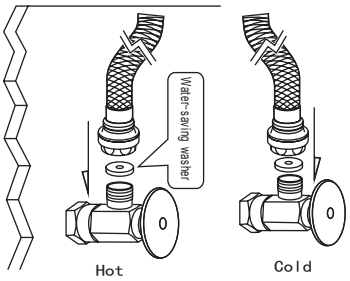

4. Install hot and cold water supply lines.

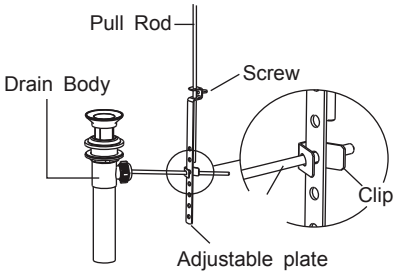

5. Install the pop-up drain in the bottom outlet of the lavatory as shown Install washer above and below both the drain body and the lavatory to avoid leakage. Connect the stopper to the drain pipe. After installation, pull the pull rod up and down to check the stopper for proper movement and stopping water.
Notes: The product you bought may come without a pop-up.

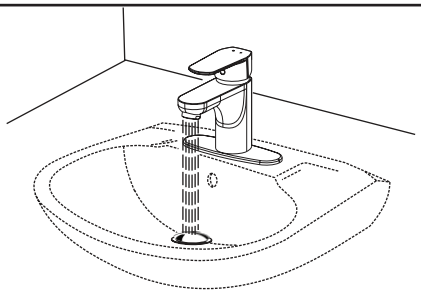

6. After all connections are tightened up, turn on the faucet and flush through water in order to remove impurities and check for any leaks.