SPECIFICATION / BREAK DOWN

GT2710-xx - Single Hole Lavatory Faucet
GT2715-xx - Single Hole Lavatory Faucet With Deck Plate

Description

- Single handle faucet
- One piece brass body
- Ceramic disc cartridge
- Brass pop-up
- 1/2" Connections
- Deck plate (GT2715-xx Only)

Standards

- Complies with IAPMO UPC/cUPC
- California AB1953 compliant
- NSF - 61-9 tested and compliant
- ADA Accessibility Guidelines for Buildings and Facilities - 4.27.4 Controls and Mechanisms

• GT2710-xx

• GT2715-xx

Colors / Finishes

01 - Chrome
72 - PVD Satin Nikel

EXPLODED DRAWING

NO.	Part No	Qty GT2710-xx		GT2715-xx
01	CTHZ0342	1		1
02	CTCB0628	1		1
03	CTCB0416	1		1
04	ATBA0130	1		1
05	CTHB0093	1		1
06	CTMB0126	1		1
07	CTYN0064	1		1
07	CTYB0516	1		1
08	CTRR0001	1		
09	CTRB0028			1
10	CTWR0305			1
11	CTCB0619			1
12	CTWP0229			1
13	CTWP0228			1
14	CTWR0028	1		1
15	CTWR0059	1		1
16	CTNB0063	2		2
17	CTST0013	2		2
18	CTST4101	1		1
19	CTCP0072	1		1
20	ATBX0038	1		1
21	CTRR0118	1		1
22	CTXP0010	1		1
23	ATBP0068	2		2
23	ATBP0176	2		2

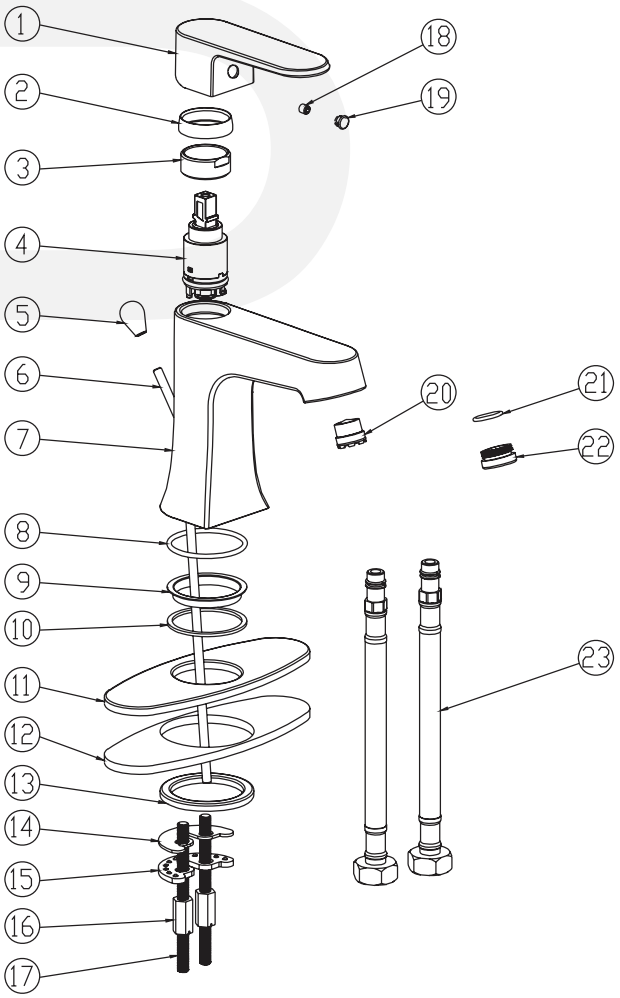

GT2710-xx

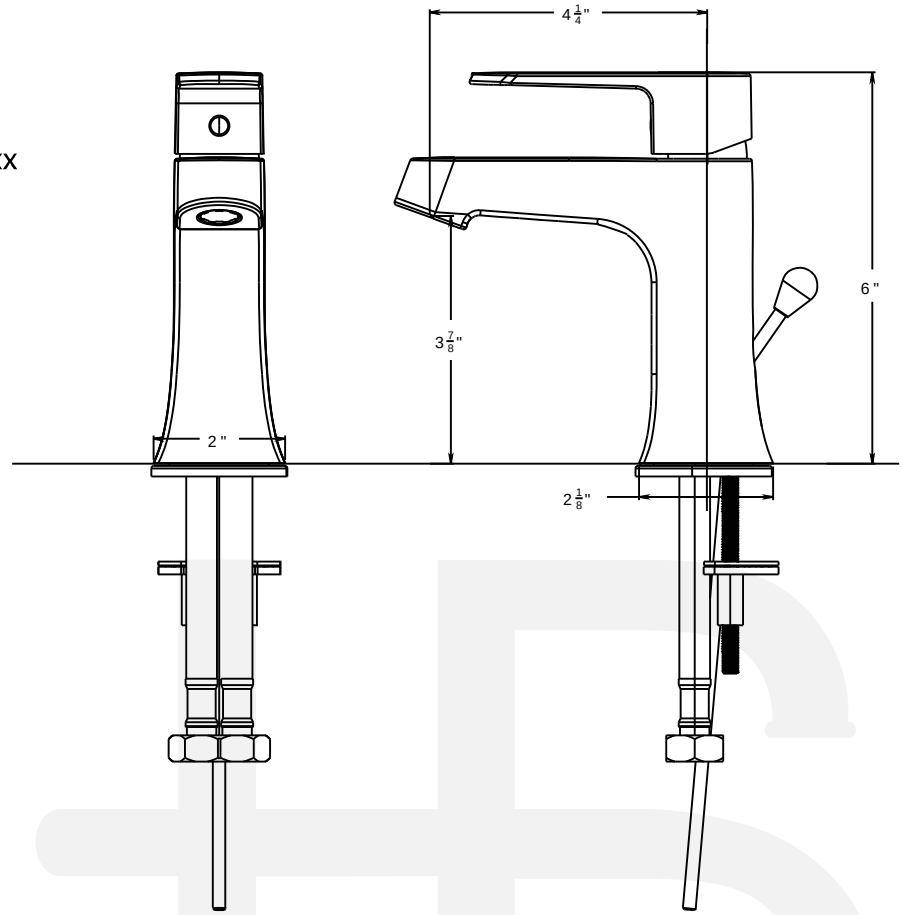
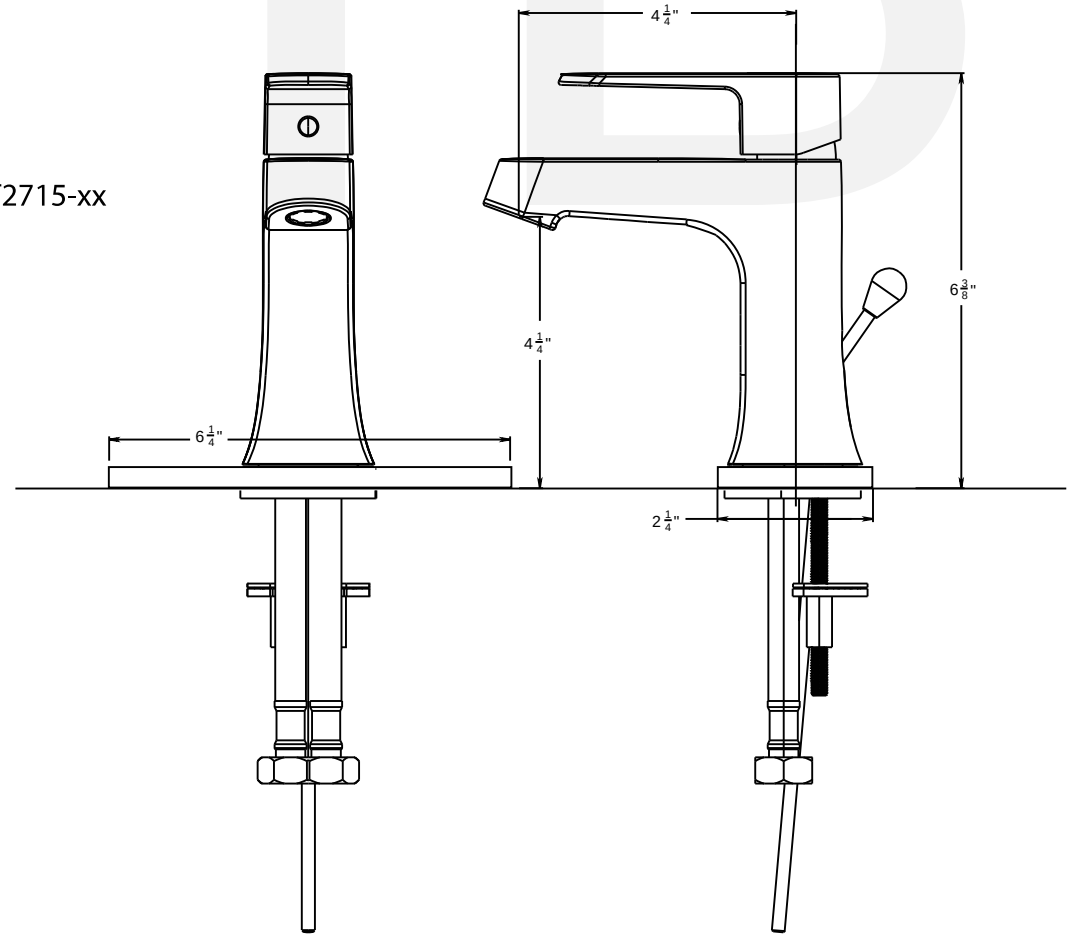
GT2715-xx