Square under mount bowl (GP2243)

Description

- Square under mount bowl
- With over flow

Standards

- ASME A112.19.2M-03 & CSA B45-02
- Listed IAPMO / CUPC
- Energy policy act of 1992 (EPACT)

Colors / Finishes

W - White
B - Biscuit
Other - Refer to price book for additional colors

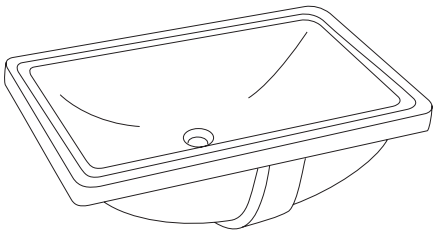

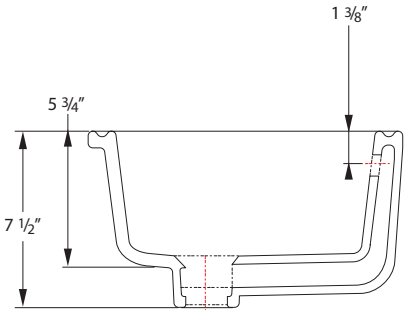

Side

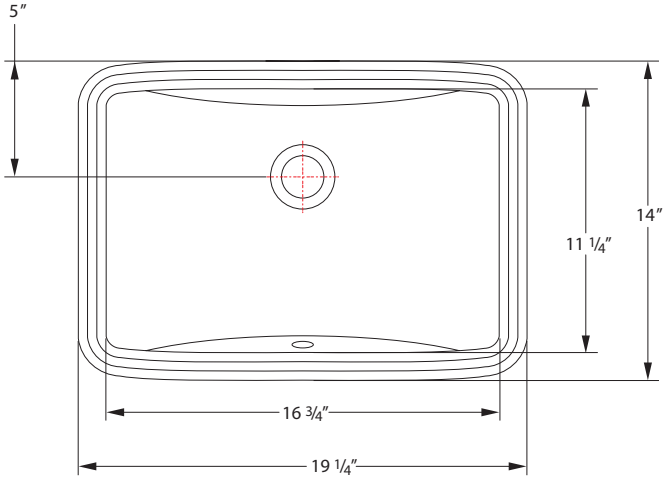

Top

Item Number	Type	Date
GP2243	Under-mount bowl	08/05/2008