D334-xx - Toe Touch Drain Trim

Description

- Toe touch drain trim
- Brass construction
- 1 1/2" coarse thread

Colors / Finishes

01 - Chrome
12 - Satin Nickel
20 - Antique Bronze
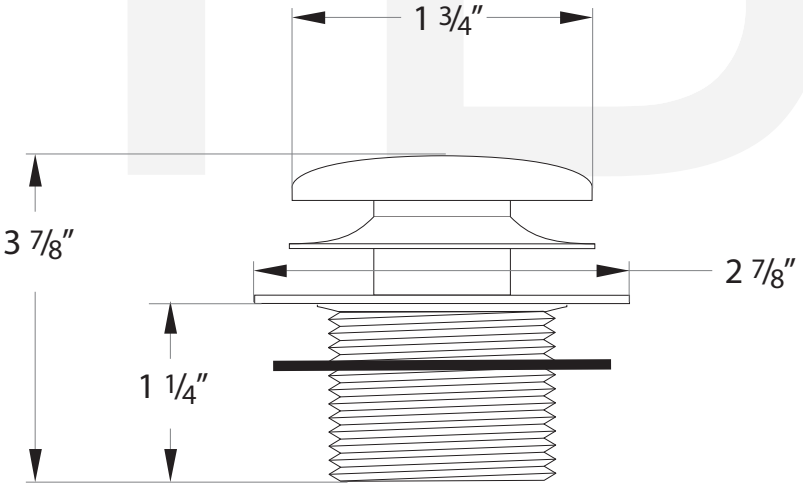
D334-xx