90730-xx - Emory Roman tub filler

Description

- 3 pc Roman tub filler faucet
- 90 deg turn ceramic disc cartridges
- Metal lever handles
- 1/2" NPT connections
- 10 GPM

Standards

- Complies with IAPMO UPC/cUPC
- ADA Accessibility Guidelines for Buildings and Facilities - 4.27.4 Controls and Mechanisms

• 90730-xx

Colors / Finishes

01 - Chrome
72 - Satin Nickel

BREAK DOWN

Component Parts List

NO.	Part No	Qty
01	CTHZ0295	2
02	CTST0155	2
03	CTST1005	2
04	CTMB0328	2
05	CTST4101	2
06	CTLZ0020	2
07	CTDT0004	2
08	CTWR0060	2
09	ATBQ0228	1
10	CTWR0216	2
11	CTWT0039	2
12	CTNB0155	2
13	ATBF0133	1
14	CTDZ0067	1
15	CTWR0290	1
16	CTRR0195	1
17	CTWR0090	1
18	CTWT0053	1
19	CTNB0059	1
20	CTPB0494	1
21	CTRR0045	1
22	CTYB0057	1
23	CTNB0037	1
24	CTRR0031	1
25	CTWR0024	1
26	CTQP0029	1
27	CTXB0066	1
28	ATBQ0227	1
29	ATBP0157	2

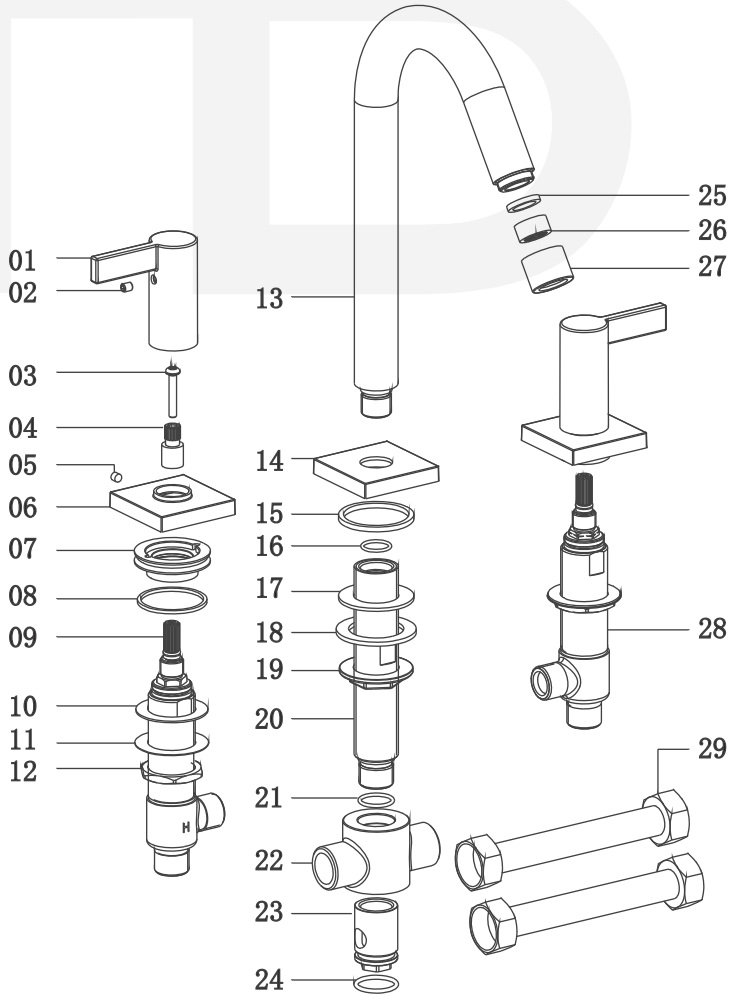

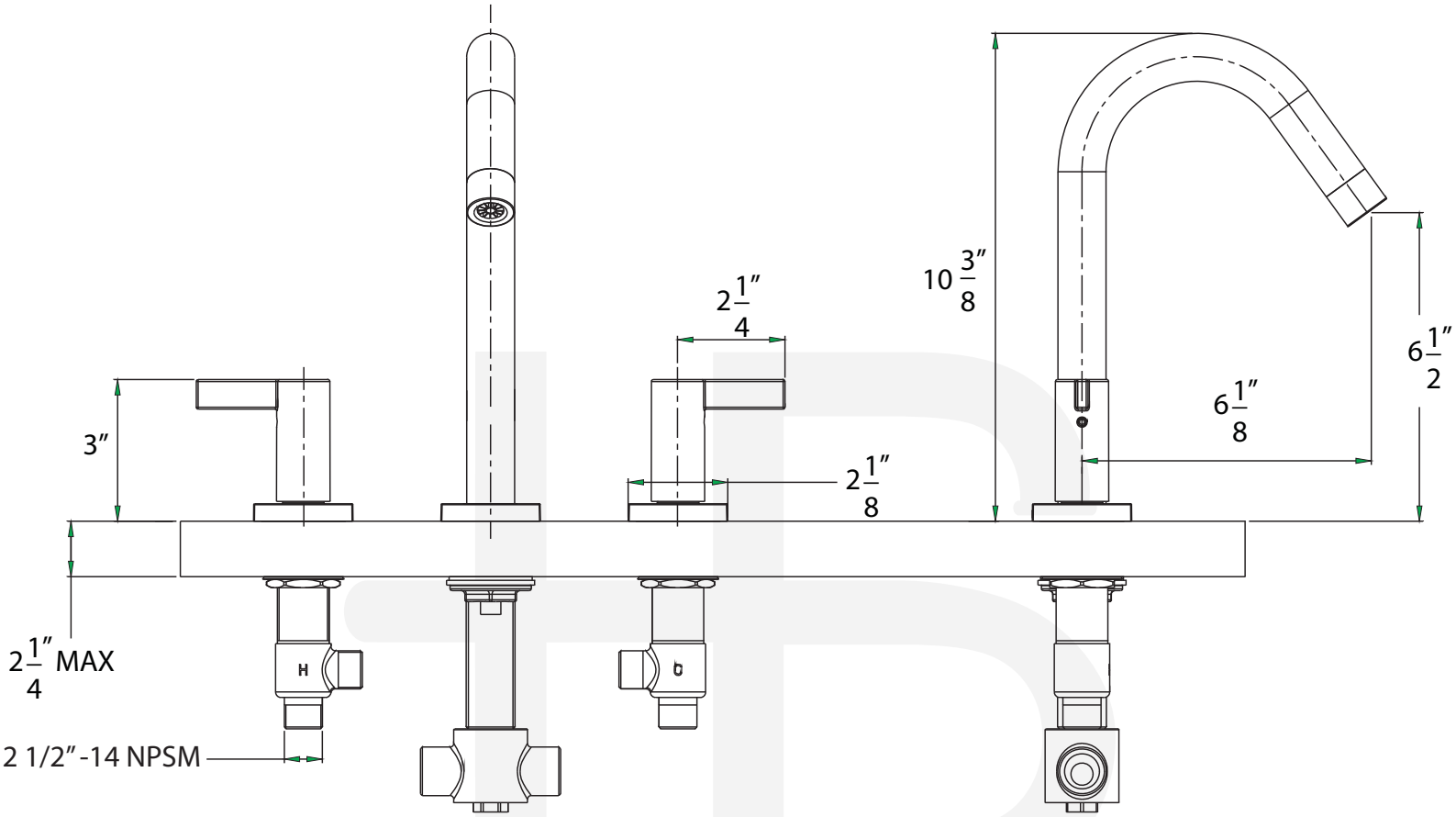

Item Number	Type	Date
90730-xx	Emory Roman Tub Filler	3/1/2011