10433-xx - 4” center Set

Description

- Twin acrylic handles
- “Reliaflo” 4” center set lavatory faucet
- Zinc die cast housing
- 90 deg turn washer-less cartridges
- 50/50 Pop-up
- 1/2” NPS connections
- 1.5 GPM ASME compliant

Standards

- Complies with IAPMO UPC/cUPC
- California AB1953 compliant
- NSF - 61-9 tested and compliant
- CALGreen compliant
- EPA WaterSense Certified by IAPMO R&T

Colors / Finishes

01 - Chrome

- 10433

BREAK DOWN
Component Parts List

NO.	Part No	Qty	
01	ATBH0070	1	
02	ATBH0071	1	
03	ATBM0022	1	
04	CTNZ0004	2	
05	CTWP0075	2	
06	ATBA0125	2	
07	CTWR0304	2	
08	CTBT0079	2	
09	CTCZ0157	1	
10	CTRR0066	2	
11	ATBY0183	1	
12	CTCP0365	1	
13	CTNP0011	2	
14	CTXB0071	1	
15	ATBX0040	1	
16	CTWR0021	1	
17	CTST1000	2	
18	CTPP0036	1	
19	ATAA0067	1	

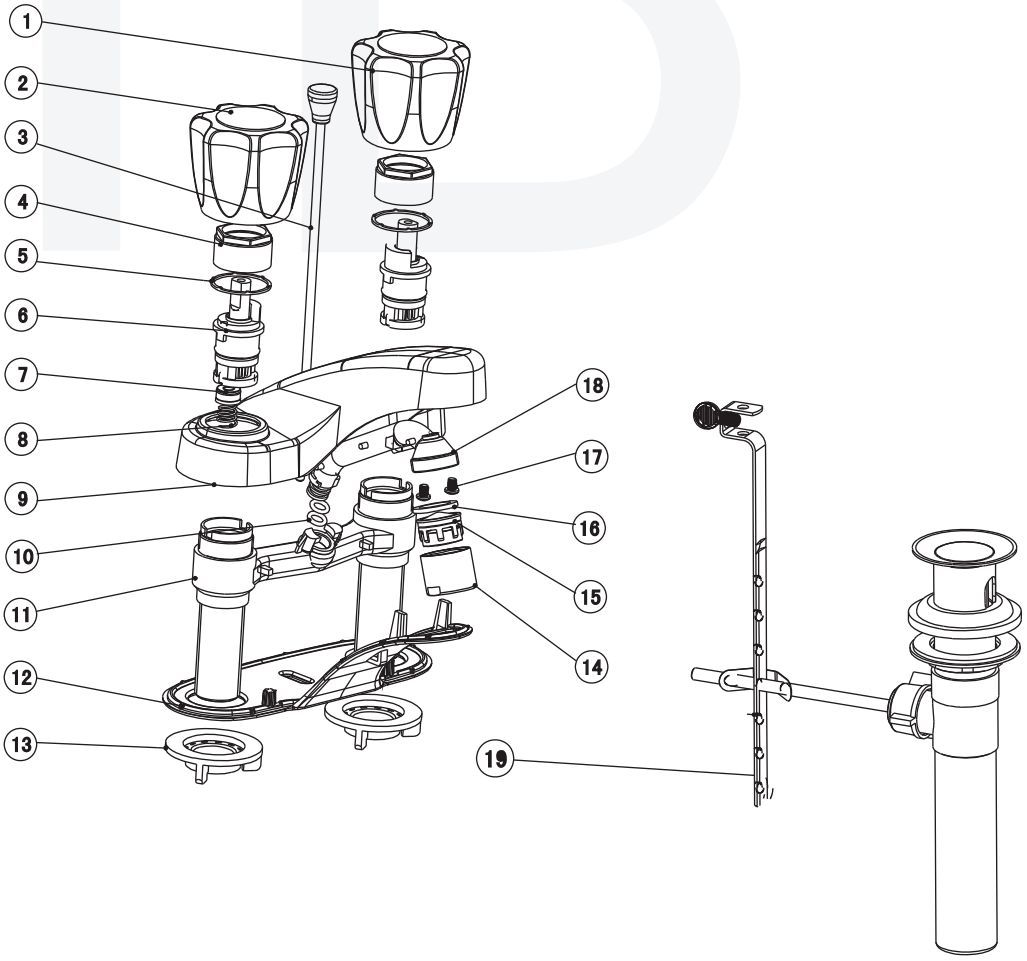

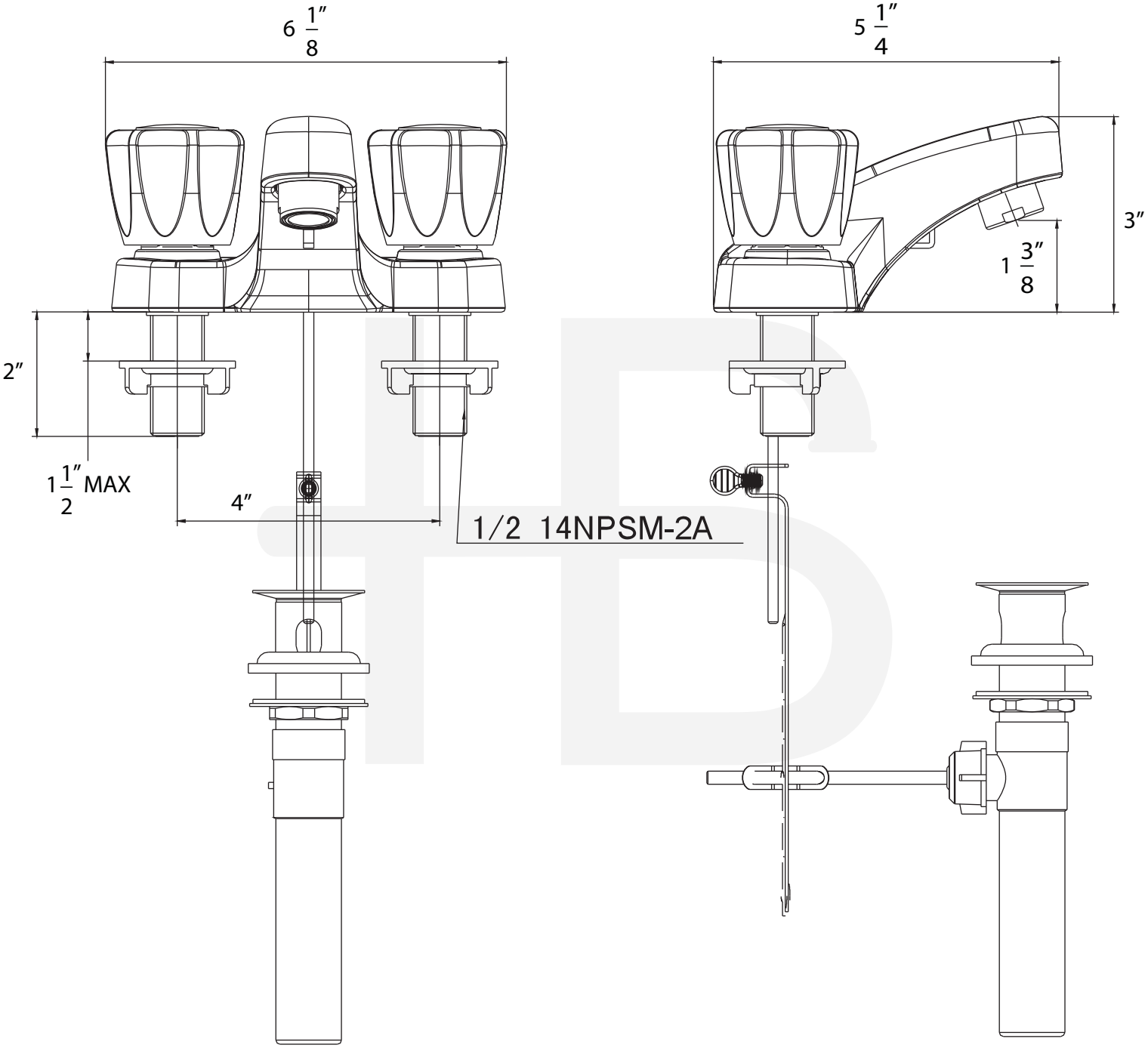

Item Number	Type	Date
10433-xx	Center Set	1/9/2014