Shower valve rough in - 04120P1-00

Description

- Ceramic disc valve
- Forged brass valve body
- 1/2" PEX inlet on hot and cold pointing up
- Hot and Cold service stops
- ASSE 1016 compliant
- Back to back installation

Standards

- Complies with IAPMO UPC/cUPC

- 04120P1-00

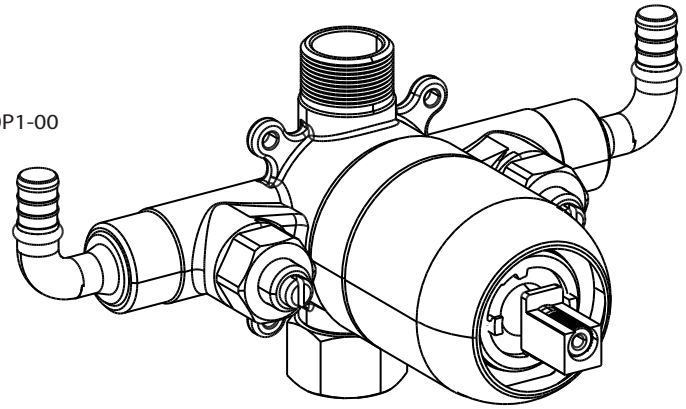

BREAK DOWN

Component Parts List

NO.	Part No	Qty
01	ATBA0109	2
02	ATBY0176	1
03	CTTB0038	1
04	ATBA3002	1
05	CTCB0615	1
06	CTCP0361	1
07	CTST1005	2

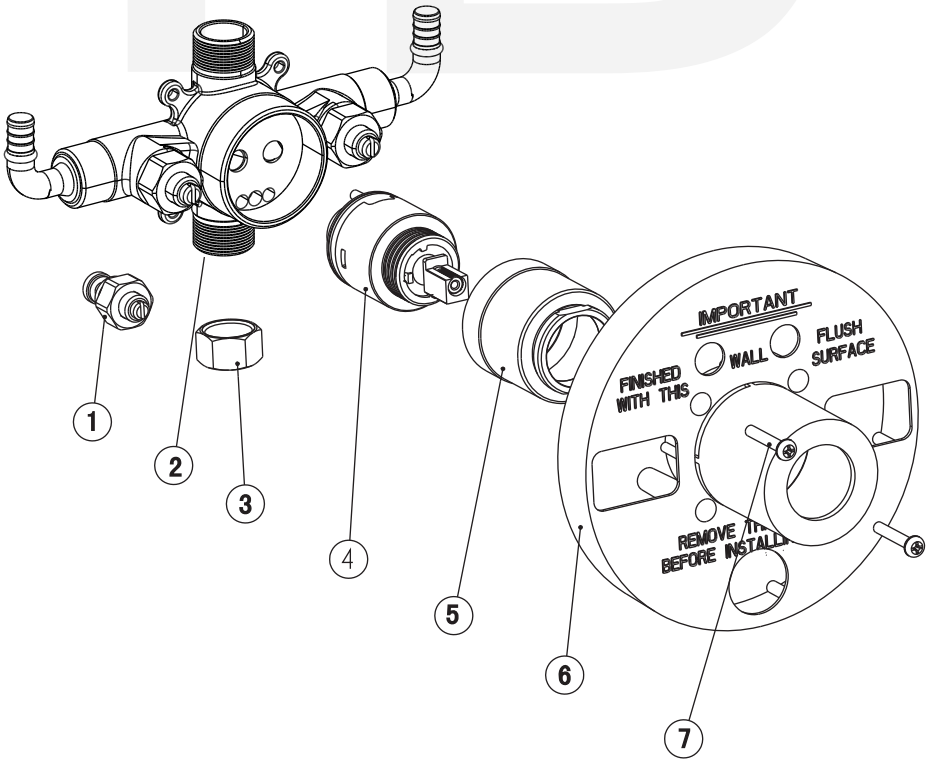

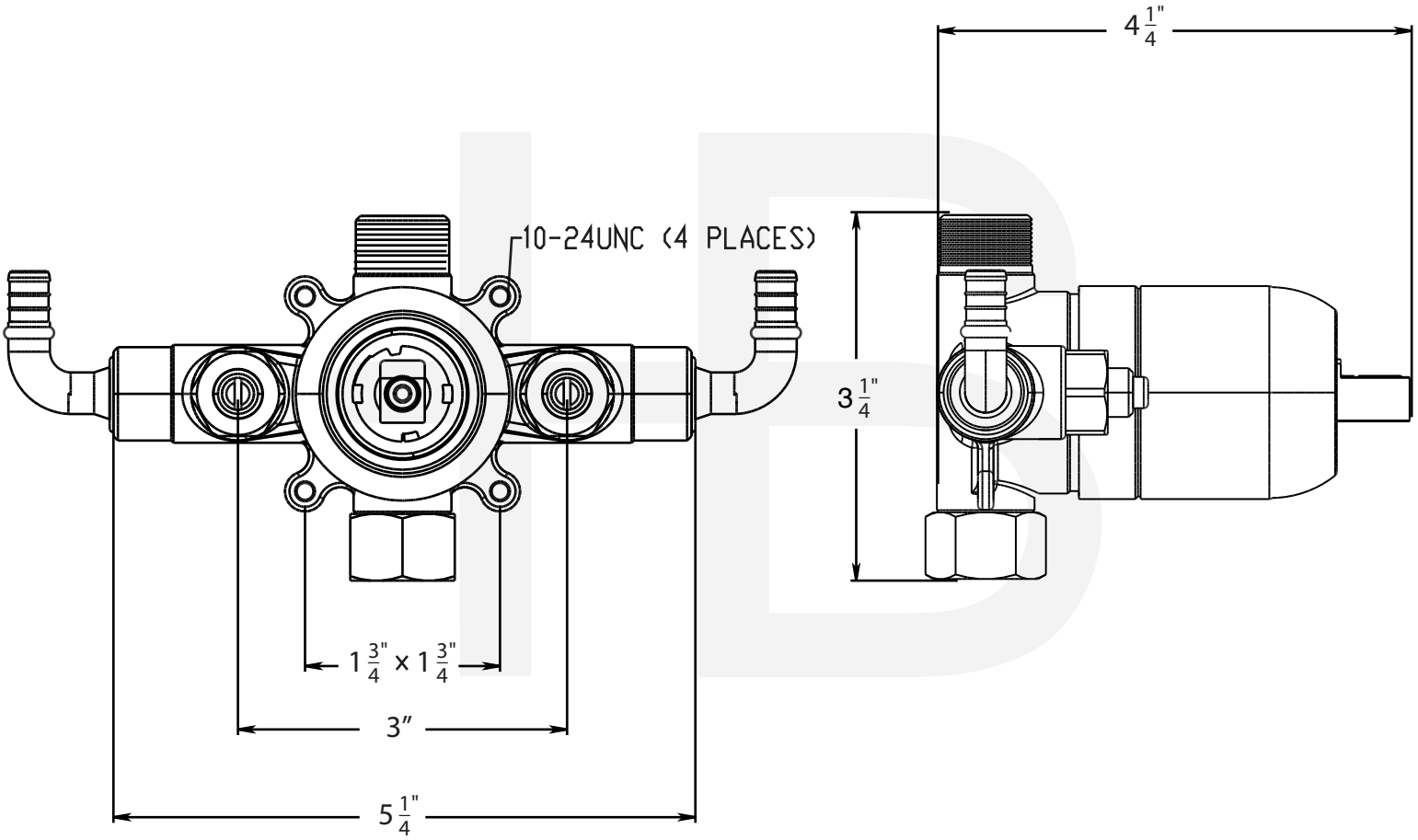

Item Number	Type	Date
04120P1-00	Rough-in Valve	2-7-2014